HITACHI

MODEL VC-6165
DIGITAL STORAGE OSCILLOSCOPE

SERVICE MANUAL

Hitachi Denshi, Ltd.

WARRANTY

This Hitachi Denshi, Ltd. product is warranted against defects in workmanship and materials. If any failure, resulting from a defect in either workmanship or material shall occur under normal use within THREE YEARS from the original date of purchase, such failure shall be corrected free of charge to the original purchaser by repair or, at Hitachi Denshi's sole option, replacement of the defective part or parts. No charge shall be made for labor or services performed during said THREE YEARS period providing the defective product is brought or sent prepaid to our Authorized Service Station. Hitachi Denshi, Ltd. will either repair or at its sole option, replace any part except for fuses, probes, lamps, batteries and other optional materials which are defective in either workmanship or material under normal and proper use.

This warranty does not cover equipment which has been tampered with in any way, or to damage caused by accident, negligence, alteration, or misapplication.

This product must be returned transportation prepaid, properly packed and insured. Hitachi Denshi, Ltd. bears transportation cost of the repaired product back to the purchaser. This warranty applies only to the original purchaser.

NO OTHER WARRANTIES ARE EXPRESSED OR IMPLIED. HITACHI DENSHI, LTD. IS NOT LIABLE FOR CONSEQUENTIAL DAMAGES.

SERVICING PRECAUTIONS

Read all instructions in the service manual and safety markings on the product thoroughly before servicing.

Disconnect power cord from power source before opening the enclosure.

NOTICE

This Service Manual describes the most typical product of this model. If there are any specific differences between this Manual and the servicing unit, please contact Hitachi Denshi sales office in your area.

CONTENTS

1. SPECIFICATIONS 1
2. ACCESSORIES 9
3. PREVENTIVE MAINTENANCE 9
4. CALIBRATION 11
   - 4.1 Calibration interval 11
   - 4.2 Test equipment required 11
   - 4.3 Preliminary procedure 11
   - 4.4 Preliminary control settings 13
   - 4.5 Initial starting procedure 14
5. DETAILED CIRCUIT DESCRIPTION 51
   - 5.1 VERTICAL CIRCUIT (◇1 , ◇2 , ◇3 , ◇9) 51
   - 5.2 CALIBRATOR (◇3) 54
   - 5.3 TRIGGER CIRCUIT (◇4 , ◇9) 57
   - 5.4 SWEEP CYCLE (◇5) 63
   - 5.5 SWEEP (◇6) 73
   - 5.6 H AMP (◇7 , ◇9) 81
   - 5.7 UNBLANKING & Z-AXIS AMP (◇7 , ◇8 , ◇9 , ◇10) 85
   - 5.8 VERTICAL CH SWITCHER (◇6) 91
   - 5.9 μ-COM, CHR GEN & FRONT PANEL (◇8 , ◇9) 93
   - 5.10 HV, CRT (◇10) 103
   - 5.11 POWER (◇11) 111
   - 5.12 V INTERFACE (◇12) 117
   - 5.13 TRACK HOLDER (◇13) 126
   - 5.14 A/D CONVERTER CIRCUIT (◇14) 130
   - 5.15 PEAK DETECTOR (◇15) 132
   - 5.16 ACQUISITION MEMORY (◇16) 135

5.17 TIME BASE CIRCUIT (◇17◇) 140
5.18 ACQ MEMORY CONTROLLER (◇18◇) 148
5.19 DIGITAL MPU (◇19◇) 155
5.20 DISPLAY (◇20◇ , ◇21◇ , ◇22◇) 171
5.21 GPIB, PLOT I/F AND ILLUM (◇23◇) 181
5.22 POWER 2 (◇24◇) 187
6. POWER UNIT REMOVAL PROCEDURES 193
7. ELECTRICAL PARTS ARRANGEMENT
(With adjustment locations) 197
8. ELECTRICAL PARTS LEAD CONFIGURATIONS 229
9. ELECTRICAL PARTS LILST 235
PEF-838 V-PRE & TRIG AMP 235
PEF-782 SWP LOGIC 239
PEF-783 PANEL 243
PEF-784 POWER 244
PEF-785 V OUT 246
PEF-786 DLY 1 248
PEF-788 DLY 3 248
PEF-789 CRT SOCKET 1 248
PEF-816 FILTER 248
PEF-839 ROM PG 249
PEF-833 ATT R/O 249
PEF-837 CYCLE 250
PEF-828 V-INTERFACE 251
PEF-834 S/H&P/D 252
A/D&ACQ MEMORY PEF-825 255
CPU PEF-826 259
DISPLAY PEF-827 260
PEF-830 GPIB 263
PEF-831 I/O Connector 264
PEF-842 ILLUMI VR 264
PEF-841 ILLUMI 264
PEF-829 AC INPUT 264

PEF-840 PS-FILTER 265
SWITING REGURTOR UNIT 265
CHASSIS 265
10. SCHEMATIC DIAGRAMS
◇1 CH1 & CH2 ATT (PEF-838) 271
◇2 CH SWITCH & DLY DRIVER (PEF-838) 273
◇3 V OUT AMP (PEF-785) 275
◇4 TRIG AMP & TRIG GEN (PEF-838, 782) 277
◇5 CYCLE (PEF 782, 837) 279
◇6 SWEEP GEN (PEF-782) 281
◇7 HAMP & HOUT ANDZ-CONTROL 283
◇8 μ-COM & ROM PG (PEF-782, 839) 285
◇9 CHR GEN & FRONT PANEL (PEF-782, 783) 287
◇10 HV, Z, CRT (PEF-784, 789) 289
◇11 AC INPUT & POWER 1 (PEF-784) 291
◇12 V INTERFACE (PEF-828, 834) 293
◇13 TRACK HOLDER (PEF-834) 295
◇14 AD CONBERTER (PEF-825) 297
◇15 PEAK DETECTOR (PEF-834) 299
◇16 ACQ MEMORY (PEF-825) 301
◇17 TIME BASE (PEF-825) 303
◇18 ACQ MEMORY CONT (PEF-825) 305
◇19 DIGITAL MPU (PEF-826) 307
◇20 DISPLAY CONT (PEF-826) 309
◇21 DISP MEMORY (PEF-827) 311
◇22 DISP SIGNAL SW (PEF-827) 313
◇23 GP-IB & PLOT I/F, ILLUMI
(PEF-830, 831, 841, 842) 315
◇24 POWER 2 (PEF-829, 840) 317
INTERCONNECTIONS 319
11. MECHANICAL PARTS LIST AND EXPLODED VIEW 322

"WARNING - THESE SERVICING INSTRUCTIONS ARE FOR USE BY QUALIFIED PERSONNEL ONLY. TO REDUCE THE RISK OF ELECTRIC SHOCK, DO NOT PERFORM ANY SERVICING OTHER THAN CONTAINED IN THE OPERATING INSTRUCTIONS UNLESS YOU ARE QUALIFIED TO DO SO."

1. SPECIFICATIONS

o CRT

Graticule:	6-inch, with internal graticule 0%, 10%, 90% and 100% markers 8 x 10 DIV (1 DIV = 1cm)
Phosphor:	P31
Accelerating potential:	17 kV approx.
External intensity modulation:	Coupling: DC coupling Voltage: 5 V or more Maximum input voltage: 30 V (DC+AC peak) or 30 Vp-p AC at 1 kHz or less Bandwidth: DC to 5 MHz

o VERTICAL DEFLECTION SYSTEM

Sensitivity:	2 mV/DIV to 5 V/DIV ±3% (switchable in 11 steps) Continuously variable
Bandwidth:	DC to 100 MHz -3dB 2 mV/DIV : DC to 20 MHz -3dB AC low pass : 10 Hz
Rise time:	3.5 ns approx. 2 mV/DIV : 17.5 ns approx.
Delay time:	Leading edge can be monitored
Maximum input voltage:	400 V (DC+AC peak) at 1 kHz or less
Input coupling:	AC, DC, GND
Input impedance:	1 MΩ ±1.5%, 23pF ±3pF

Display modes:	CH1, CH2, DUAL, CHOP (250 kHz approx.), ADD (DIFF mode can be established when the CH2 is in the INVERT mode.)
Bandwidth limiting function:	20 MHz (only valid for a trigger signal in the STORAGE mode)
Polarity selection	+, - (CH2 only)
Common-mode rejection ratio:	20 dB minimum at 20 MHz
X-Y operation:	NON STORE mode: X-axis, Y-axis selectable STORAGE mode: X-axis = CH1 Y-axis = CH2
Sensitivity:	X axis: CH1, CH2 2 mV to 5 V/DIV ±3% EXT 0.1 V/DIV ±5% EXT ÷ 10 1 V/DIV ±5% Y axis: 2 mV to 5 V/DIV ±3%
Phase error:	3° or less from DC to 50 kHz
X bandwidth:	DC to 500 kHz (-3 dB)

o HORIZONTAL DEFLECTION SYSTEM

Sweep time	
*NON STORE mode	
A(main) sweep:	50 ns/DIV to 0.5 s/DIV Continuously variable (UNCAL)
B(delay) sweep	50 ns/DIV to 50 ms/DIV
*STORAGE mode	
A(main) sweep:	50 ns/DIV to 0.5 s/DIV 50 ns/DIV to 1 µs/DIV available only for a repetitive waveform
B(delay) sweep:	2 µDIV to 50 ms/DIV
*ROLL mode:	0.1 s/DIV to 50 s/DIV

*ENV mode

A(main) sweep:	0.1 ms/DIV to 0.5 s/DIV
B(delay) sweep:	0.1 ms/DIV to 50 ms/DIV
Accuracy:	X1: ±3%, X10 MAG: ±4%
Holdoff time:	Variable
Delay time:	1 µs to 5s
Delay jitter:	1/20,000 or less
Sweep magnification:	X10
Maximum sweep rate:	5 ns/DIV
Alternate separation:	Variable (NON STORE only)
Trigger lock function:	Provided
Auto range function:	Provided

o TRIGGERING

Trigger mode:	Trigger, auto trigger
Trigger source:	CH1, CH2, EXT (AC,DC,DC÷10), LINE
TV trigger:	Exclusive sync separator circuit provided Sensitivity: SYNC signal INT: 1 DIV or more EXT: 200 mVp-p or more

Trigger sensitivity:

NORM mode:

Frequency	DC to 20 MHz	20 MHz to 100 MHz
INT	0.35 DIV	1.5 DIV
EXT	50 mV	150 mV

AUTO mode:

Frequency	30 to 100 Hz	100 Hz to 20 MHz	20 to 100 MHz
INT	1.5 DIV	1 DIV	1.5 DIV
EXT	150 mV	100 mV	150 mV

Trigger level variable range:

AUTO: Automatically corresponds to the trigger signal

NORM:

INT: ±4 DIV or more

EXT : ±0.4 V or more

EXT÷10: ±4 V or more

Slope: +, -

External input: Impedance: 1 MΩ ±5%, 25pF ±6 pF

Voltage: 400 V (DC+AC peak) at 1 kHz

o READOUT FUNCTION

Panel setting display:

Vertical axis: V/DIV, UNCAL, probe conversion

Sweep speed: S/DIV, UNCAL, MAG (converted value)

Other: Delay time, MAG POINT, PRETRIGGER, NO. OF SWEEPS

o CURSOR READOUT

Function:

Voltage difference ΔV : Δ-REF

Time difference ΔT : Δ-REF

Frequency 1/ΔT : Δ-REF

o EXTERNAL OUTPUT

Trigger signal out:	Output voltage : 25 mV/DIV approx. (Full scale on the CRT) 50-ohm termintation
	Frequency response: DC to 10 MHz (-3 dB)
	Output impedance : 50 ohms approx.

o CALIBRATOR

Waveform:	1 kHz ±20%, square wave
Voltage:	0.5 V ±1%

DIGITAL STORAGE FUNCTIONS

o WAVEFORM DATA STORAGE

Memory capacity:	4000 words/CH x 2
Vertical resolution:	8 bits/10 DIV
Horizontal resolution:	400 data/DIV
Maximum sampling rate:	100 Msps, 2-channel simultaneous sampling Sampling rate depends on the time range. (400 sample/DIV, but 200 sample/DIV only at the 2 µs/DIV range)
Maximum storage frequency:	25 MHz (a transient signal) (Maximum amplitude error: 30% or less) 100 MHz (a repetitive signal)

o DATA ACQUISITION

NORM storage mode:	Updates a picture on the CRT at each triggering.
AVG mode:	Averages input signals by the selected number of sweeps and displays the result after the averaging has reached the selected number. (Number of average: 2^n, maximum 2^8 (256))
ENV mode:	Displays the envelope of an amplitude modulated waveform. It is possible to detect a pulse whose width is more than 100 ns.
HOLD mode:	Holds the waveform displayed on the CRT .
SINGLE sweep:	Performs an operation of the NORM storage, AVG, or ENV mode once at each pressing of the SINGLE switch in the HOLD mode, and updates a picture.
ROLL mode:	Shifts data from right to left continuously on the CRT. (The updating point is the right end.)

o DATA SAVE: Up to two waveforms of CH1 can be saved. One of the stored waveforms can be displayed on the CRT. (In the AVG mode, the saved data is destroyed.)

o PRETRIGGER:	0 to 9.9 DIV variable (in 0.1 DIV steps)
o DATA OUTPUT	
Analog PLOT output:	
Y axis output:	2 channels (Y-T output) 1 channel (X-Y output) 1 V/DIV ±100 mV
Output for X-Y recorder:	
X axis output:	1 channel 1 V/DIV ±100 mV
Output time: (X and Y)	1, 2, 5, and 10 s ±5%/DIV (4-step switching)
Load resistance: (X and Y)	2 kΩ or more
Pen lift output:	TTL negative, fan out 1
Digital PLOT output:	For HP-GL According to GPIB
o DIGITAL OUTPUT:	Provides data through GPIB. Data: Measurement conditions and waveform Measurement conditions: Vertical mode, Horizontal mode, TIME/DIV, probe factor, VOLTS/DIV, pretrigger, delay, etc. Waveform: Decimal progression ASCII system or binary system
o MAGNIFYING DISPLAY:	A HOLD waveform display after storage can be magnified up to 100 times in conjunction with the TIME/DIV switch.

ALT MAG:	An initial and a magnified waveforms can be displayed simultaneously.
o BATTERY BACK-UP:	Only a save and a work memories can be backed up for approx. 72 hours.

o POWER SUPPLY

Voltage:	90 V to 250 V AC
Frequency:	48 to 440 Hz
Power consumption:	120 W approx.

o ENVIRONMENT

Operating temperature:	0 to 40 ^{o}C
Operating humidity:	45 to 85%
Specification guaranteed temperature:	10 to 35°C
Safe storage temperature:	-20 to +70°C
Safe storage humidity:	35 to 85% (70% or less in the temperature of 50°C)

o DIMENSIONS AND WEIGHT

Dimensions:	330(W) x 160(H) x 450(D) mm approx. (13.0(W) x 6.3(H) x 17.7(D) in. approx.)
Weight:	11 kg approx. (24.2 lb. approx.)

2. ACCESSORIES

(1) Oscilloscope, VC-6165 ..... 1 unit
(2) Accessories
Probes, AT-10AP 1.5 ..... 2 pcs.
Fuse, 5 A (A spare fuse is inside the fuse holder of the oscilloscope) ..... 1 pc.
Operation manual ..... 1 copy
AC power cord, 3-conductor ..... 1 pc.
Dust cover ..... 1 pc.

3. PREVENTIVE MAINTENANCE

Preventive maintenance, when performed on a regular basis, can prevent instrument breakdown and may improve the reliability of the oscilloscope. The severity of environment to which this instrument is subjected will determine the frequency of maintenance. A convenient time to perform preventive maintenance is preceding recalibration of the instrument.

Disassembly

Remove the top cover and the bottom cover of the instrument. Most of the internal parts of the instrument are now accessible. If access to the front of the circuit boards are necessary, remove the knobs from the external control shafts on the board.

Cleaning

The instrument should be cleaned as often as operating conditions require. Accumulation of dirt in the instrument can cause component breakdown.
The covers provide protection against dust in the interior

of the instrument. Loose dust accumulated on these covers can be removed with a soft cloth or small brush.

Dirt that remains can be removed with a soft cloth dampened in a mild detergent and water solution. Abrasive cleaners should not be used. Cleaning the interior should only be occasionally necessary. The best way to clean the interior is to blow off the dust with a dray, low-velocity stream of air. A soft-bristle brush or a cotton-tipped applicator is useful for cleaning in narrow spaces or for cleaning more delicate components.

Visual Inspection

The instrument should be inspected occasionally for such defects as broken connections, improperly seated transistors, damaged circuit boards, and heat-damaged parts. The corrective procedure for most visible defects is apparent; however, particular care must be taken if heat-damaged components are found. Overheating usually indicates other trouble in the instrument; therefore, correcting the cause of the overheating is important to prevent recurrance of the damage.

4. CALIBRATION

Hitachi Denshi provides complete instrument repair and calibration. Contact your local Hitachi Denshi office or representative.

4.1 Calibration interval

To maintain instrument accuracy, perform the calibration of the instrument at least every 1000 hours of operation or every six months if used infrequently.

4.2 Test equipment required

The test equipment and accessories listed in Table 4-1 or equivalent are required to perform the calibration of the instrument. The minimum specifications required for accurate calibration are also listed. All the test equipment is assumed to be correctly calibrated and operate properly within the listed specifications. It is recommended to use the test equipment which exceeds the listed specifications. Operating instructions for the test equipment are not given in this procedure. Refer to the instruction manual for the test equipment for more information.

4.3 Preliminary procedure

This instrument should be calibrated at an ambient temperature of +20°C (±5°C) for the best overall accuracy

1. Connect the instrument to AC line voltage, 50 Hz to 400 Hz line source.
2. Set the instrument controls as given in the Preliminary Control Settings. Allow at least fifteen minutes of warmup before proceeding.
3. See the Adjustment Locations in Section 6.

Table 4-1
TEST EQUIPMENT AND ACCESSORIES REQUIRED

	Description	Specifications	Applications	Examples of Applicable Test Equipment
1.	Constant Amplitude Signal Generator	Reference frequency: 50 kHz, Maximum frequency: 150 MHz, Amplitude: variable	Check horizontal, vertical and trigger bandwidths.	TEKTRONIX ® SG503
2.	Standard amplitude Calibrator	Amplitude accuracy: 0.25%, Variable amplitude: 5 mV to 40 V, Frequency: 1 kHz square wave	Check horizontal and vertical gains.	TEKTRONIX PG506
3.	Square-wave Generator	Variable frequency: 10 Hz to 1 MHz, Output amplitude: 10 mV to 100 V	Check probe and vertical compensation.	TEKTRONIX PG506
4.	Digital Multimeter	Accuracy: 0.1%	Check power supply.	TEKTRONIX DM501A
5.	Digital Frequency Counter	Accuracy: 0.1%	Check CAL frequency.	
6.	Time Mark Generator	Accuracy: 0.1%	Check sweep time.	TEKTRONIX TG501
7.	Cable	Impedance: 50 ohms, Type: RG-58/U, Length: 42 inches, Connectors: BNC	This cable is used for almost all adjustment.	Hitachi Part No. 4202
8.	Termination	Impedance: 50 ohms, Connectors: BNC Feed through	Check vertical amplifier compensation.	
9.	Attenuator	Ratio: 10X, Connectors: BNC, Impedance: 50 ohms	Check vertical amplifier bandwidth.	
10.	T-Connector	Connectors: BNC	Check X-Y operation.	Hitachi Part No.1301

4.4 Preliminary control settings

Prior to calibration procedures, set the instrument controls as follows.

Controls		Setting
POWER		OFF
FOCUS		Midrange
TRACE ROTATION		Any position
INTEN		CCW
READOUT INTEN		CCW
V. POSITION	CH1	Midrange
	CH2	Midrange
V. VAR	CH1	CW (CAL)
	CH2	CW (CAL)

Controls		Setting
AC-DC	CH1	Any position
	CH2	Any position
GND	CH1	GND
	CH2	GND
SELECTOR		Any position
VARIABLES		Any position
TIME/DIV		Any position
H MODE		A
V MODE		CH1

STORAGE MODE	NON STORE
CH1 ▙ CH2 ▟ SW	CH1
DISP SAVE	OFF (pulled out)
ALT MAG	OFF (pulled out)
STORAGE V POS	OFF (pulled out)

Note:

CW: Clockwise
CCW: Counterclockwise
H MODE: Horizontal mode
V MODE: Vertical mode

After completion of the above settings, turn the POWER switch to ON, and set the INTEN and READOUT INTEN controls to any position.

4.5 Initial starting procedure

1. Turn the POWER switch to on.
2. Allow a few seconds to warm up the cathode ray tube (CRT). A trace will appear on the CRT.
3. If the trace does not appear, increase the intensity by turning the INTEN control clockwise until the trace is easily observed.
4. Adjust the FOCUS control appropriately.
5. Adjust the POSITION controls to center the trace if necessary.

POWER SUPPLY

① +12 V ADJ RV1506 (PEF-784)

Measure the voltage on pin ③ of connector P1501 on the PEF-784 board with a digital voltmeter, and adjust RV1506 so that the voltage is +11.975 to +12.025 V.

② +5 V ADJ RV7015

a. Set:

STORAGE MODE: NORM

b. Measurue the voltage between pins ② and ⑤ (GND) of connector P7002 on the PEF-840 board with the digital voltmeter, and adjust RV7015 so that the voltage is +4,975 V to +5,025 V.

Note: Perform the avobe pecedures after removing the PEF-831 by removing two screws on the rear panel.

③ CRT BIAS RV1042 (PEF-784)

a. Set:

MODE:	CH1
SOURCE OR X :	CH2
GND (CH1, CH2):	ON (Push-in)
H MODE:	X-Y (Push ALT and B simultaneously.)
SELECTOR:	H POS
EXT INPUT (for X signal):	No signal

b. Position a spot at the center on the CRT screen by the CH1 POSITION control (vertical position) and the VARIABLES control.

Note: When the SELECTOR switch is at H POS, the VARIABLES control is usable as a horizontal position control.

c. Adjust the INTEN control so that the voltage on Z OUT CHECK on the PEF-784 board is +15 V.

d. Adjust CRT BIAS control RV1042 just before the spot starts to appear on the CRT screen.

e. Adjust the INTEN control and verify that the spot starts to appear within the range (as illustrated below.)

INTEN

④ TRACE ROTATION RV1606 (Front Panel)

a. Set:

TIME/DIV:	A: 1 ms
H MODE:	A
V MODE:	CH1

b. Adjust the horizontal position until the left end of the trace is lined up with the center of the leftmost vertical graticule line on the CRT screen.

c. Adjust the TRACE ROTATION control on the front panel so that the trace is parallel with the horizontal graticule line.

d. Repeat b and c alternately until the trace is aligned with the center horizontal graticule line.

⑤ ASTIG RV1281 (PEF-784)
FOCUS RV1607 (Front Panel)

a. Set:

CH1 GND:	ON (Push-in)
CH2 GND:	ON (Push-in)
H MODE:	X-Y (Push ALT and B simultaneously.)
SOURCE OR X:	CH1
BW LIMIT:	ON

b. Locate a spot as illustrated in the following figure.

c. Adjust INTEN control RV1601 (PEF-784) just before halation starts to occur.

d. Rotate FOCUS control RV1607 (PEF-784) fully clockwise.

e. Adjust ASTIG control RV1281 (PEF-784) so that the spot is as true a circle as possible.

f. Adjust FOCUS control RV1607 (PEF-784) to obtain the smallest spot.

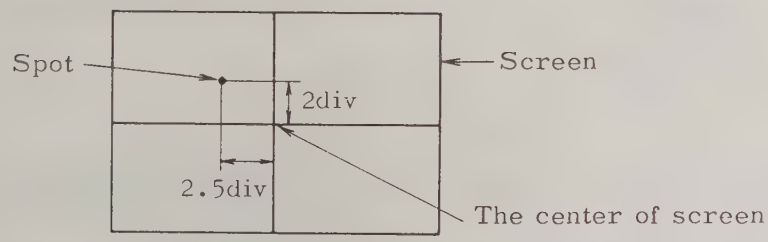

⑥ FOCUS CENT RV1253 (PEF-784)

a. Perform the adjustment ⑤ .

b. Set the FOCUS control to the mechanical mid-position.

c. Adjust FOCUS CENT control RV1253 (PEF-784) to obtain the samllest spot.

HORIZONTAL

Press AUTO of the TIME/DIV switch while holding the SELECTOR switch downward(▼) so that the sweep circuit operation is initialized. Then, proceed the following adjustment. (The adjustment in the X-Y mode is simultaneously performed.)

⑦ H GAIN RV834 (PEF-782)

a. Set:

CH2 AC/DC:	AC
CH2 VOLTS/DIV:	10 mV (CAL)
H MODE:	X-Y
V MODE:	CH1
SOURCE $_{OR}$ X:	CH2
CH1 GND:	GND (Push-in)

b. Connect a 50 mV square wave to the CH2 INPUT connector.

c. Adjust H GAIN control RV834 (PEF-782) so that the distance between the spots on the CRT is 5 div.

Note: Perform the adjustment of CH1 DC GAIN, CH2 DC GAIN, INT HF GAIN before this adjustment.

⑧ 1 ms/div ADJ RV801 (PEF-782)

a. Set:

V MODE:	CH1
CH1 AC/DC:	DC
H MODE:	A
A TIME/DIV:	A = 1 ms
CH1 input:	1 ms time mark signal from a time mark generator
INTEN:	As required
READOUT INTEN:	As required
X10 MAG:	OFF

b. Align the 1st time marker with the zeroth (leftmost) vertical graticule line.

Note: This adjustment is performed by moving the horizontal position by the VARIABLES control with H POS selected by the SELECTOR.

c. Adjust 1 ms/div ADJ control RV801 (PEF-782) so that the 11th time marker is aligned with the 10th (rightmost) vertical graticule line.

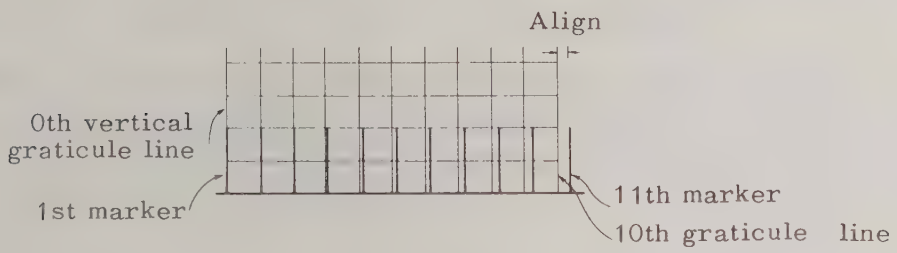

⑨ X10 MAG GAIN RV844 (PEF-782)

a. Set:

V MODE:	CH1
CH1 AC/DC:	DC
H MODE:	A
CH1 input:	1 ms from the time mark generator
INTEN:	As required
REDOUT INTEN:	As required
X10 MAG:	ON
A TIME/DIV:	A * 0.1 ms (because the X10 MAG control is ON)

b. Align the 1st time marker with the zeroth (leftmost) vertical graticule line.

c. Adjust MAG GAIN control RV844 (PEF-782) so that the 11th time marker is aligned with the 10th (rightmost) vertical graticule line.

⑩ MAG CENT RV831 (PEF-782)

a. Set:

Same as a of ⑨.

b. Adjust the horizontal position, and align the rising edge of the 2nd time marker with the center vertical graticule line (6th line from the left).

c. Adjust MAG CENT control RV831 (PEF-782) so that the above 2nd time marker is not displaced from the center vertical graticule line when the X10 MAG switch is set to off.

⑪ H POS START RV807 (PEF-782)

a. Set the POWER switch to OFF first, and then turn it back to ON. At this time, leave the controls on the front panel as they are.

b. Adjust H POS START RV807 (PEF-782) so that the start point of the sweep is aligned with the leftmost graticule line.

⑫ 5 ns CV859 (PEF-784)

a. Set:

A TIME/DIV: A = 50 ns

CH1 input: 10 ns (Fed from the time mark generator) (When the rate is 10 ns or more, a sine wave signal is supplied.)

H POS: Adjust so that the numbers of the peaks at either side of the center vertical graticule line are equal

X10 MAG: ON (A*5 ns)

b. Adjust the H POS control so that the numbers of the peaks at either side of the center vertical graticule line are equal with the peak of the center wave aligned with the center vertical graticule line.

c. Adjust 5 ns CV859 (PEF-784) so that the time (t_1 and t_2) from the center vertical graticule line to the 2nd peaks on either side of the center line is equal.

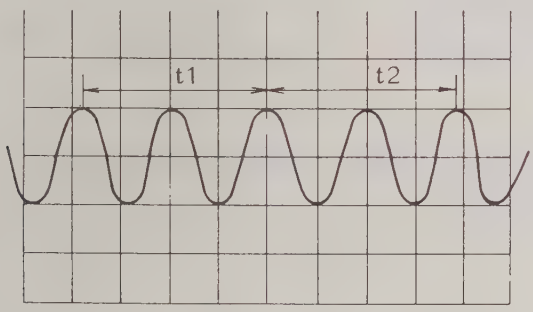

VERTICAL

⑬ CH1 DC BAL RV37 (PEF-838)

a. Set:

V MODE:	CH1
CH1 GND:	ON (Push-in)
CH1 VOLTS/DIV:	2 mV
A TIME/DIV:	A = 1 ms
CH1 V POSITION:	Mid-position

b. Adjust CH1 DC BAL control RV37 (PEF-838) so that the displacement of the trace is within ±0.1 div when the CH1 VOLTS/DIV switch is switched between 2 mV and 10 mV.

Note: At this time, confirm that the display of the CH1 ATT state is switched on the lower left of the screen.

⑭ CH2 DC BAL RV137 (PEF-838)

a. Set:

V MODE:	CH2
CH2 GND:	ON (Push-in)
CH2 VOLTS/DIV:	2 mV
A TIME/DIV:	A = 1 ms
CH2 V POSITION:	Mid-position

b. Adjust CH2 DC BAL control RV37 (PEF-838) so that the displacement of the trace is within ±0.1 div when the CH2 VOLTS/DIV switch is switched between 2 mV and 10 mV.

Note: At this time, confirm that the display of the CH2 ATT state is switched on the lower left of the screen.

⑮ CH2 POS CENT RV62 (PEF-838)

a. Set:

V MODE:	ALT
V POSITION: (CH1, CH2)	Mid-position
GND (CH1, CH2):	ON (Push-in)
A TIME/DIV:	A = 0.1 ms

b. Adjust CH2 POS CENT control RV162 (PEF-838) so that the trace does not move when CH2 INV control S1611 (PEF-783) is turned on and off.

⑯ CH1 POS CENT RV62 (PEF-838)

a. Set:

V MODE:	ALT
CH2 V POSITION:	As set in ⑮ - a.
CH2 GND:	ON (Push-in)

b. Adjust CH1 POS CENT control RV62 (PEF-838) so that the CH1 trace is aligned with the CH2 trace (See item ⑮).

⑰ CHR Y CENT RV574 (PEF-785)

a. Set:

Turn the POWER switch to OFF first, and then turn it back to ON to initialize the microcomputer.

CHR INTEN:	As appropriate
V MODE:	CH1
CH1 VOLTS/DIV:	10 mV
(H MODE:	A)
SELECTOR:	$_{\Delta}$V of MEASURE

When power is turned on, H POS is automatically set. Consequently, when the SELECTOR switch is lowered one step further, MEASURE is selected (the LED lights) and $_{\Delta}$V is displayed on the CRT. (If the SELECTOR switch is lowered one more step, $_{\Delta}$T is displayed on the CRT with the MEASURE LED lit. If the switch is lowered one more step, $1/_{\Delta}$T is displayed on the CRT.)

VARIABLES:	Do not move this control to avoid a possible movement of the cursors.

b. Verify that the "ΔV+600 mV" is displayed at the top left of the screen.

c. Adjust CHR Y CENT RV574 (PEF-785) so that the cursors are at the same distance from the center of the CRT screen.

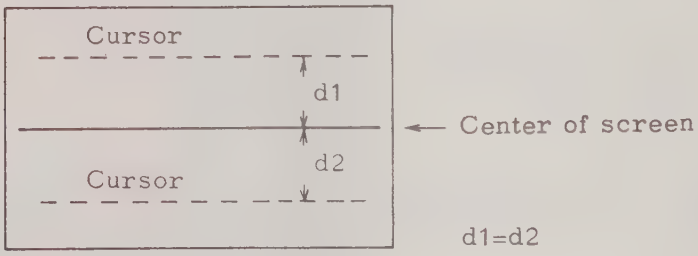

⑱ CHR Y GAIN RV576 (PEF-785)

a. Set:

Same as (1) of ⑰.

b. Adjust CHR Y GAIN RV576 (PEF-785) so that the distance between the two cursors is 6 div.

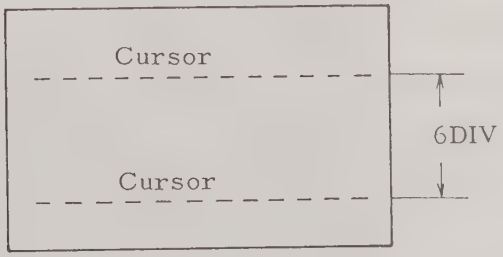

⑲ CHR Y CENT RV574 (PEF-785)

Since the CHR Y GAIN adjustment is related to the CHR Y CENT adjustment, adjust the CHR Y CENT adjustment described in ⑰ again.

⑳ CH1 DC GAIN RV30 (PEF-838)

a. Set:

V MODE:	CH1
CH1 VOLTS/DIV:	10m V
A TIME/DIV:	A = 2 ms
CH1 AC DC:	DC
CH1 input:	Use the Tektronix's PG-506 pulse generator or equivalent. Set the PG-506 in the FAST RISE mode and connect the output (1 kHz square wave) in the 50-ohm termination. (In the FAST RISE mode, a waveform with a flat top is ensured.

b. Adjust the pulse generator so that the amplitude of the square wave is approximately 5 div at the center on the CRT screen. (50-ohm terminated)

c. Adjust CH1 DC GAIN control RV30 (PEF-838) so that the square wave is flat at top.

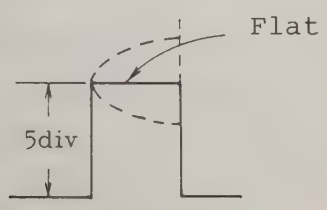

(21) CH2 DC GAIN RV130 (PEF-838)

a. Set:

V MODE:	CH2
CH2 VOLTS/DIV:	10 mV
A TIME/DIV:	A = 2 ms
CH2 AC/DC:	DC
CH2 input:	Same as CH1 input (19) .

b. Adjust the pulse generator so that the amplitude of the square wave is approximately 5 div on the CRT screen. (50-ohm terminated)

c. Adjust CH2 DC GAIN control RV130 (PEF-838) so that the square wave is flat at top.

(22) V GAIN RV505 (PEF-785).... Total gain control common to CH1 and CH2

a. Set:

V MODE:	CH1
SOURCE OR X:	CH2
TRIG MODE:	AUTO (Free-running scan) Normally free-running scan is performed in the AUTO mode unless the trigger level is at the fringe of triggering. If the free-running scan is not performed, adjust the TRIG LEVEL control.
CH1 VOLTS/DIV:	10 mV
A TIME/DIV:	A = 0.1ms
CH1 input:	A 1 kHz, 50 mVp-p square wave for calibration (from the PG-506 or equivalent) (50-ohm termination open)

b. Adjust V GAIN control RV505 (PEF-785) so that the amplitude of the square wave is 5 div at the center on the screen.

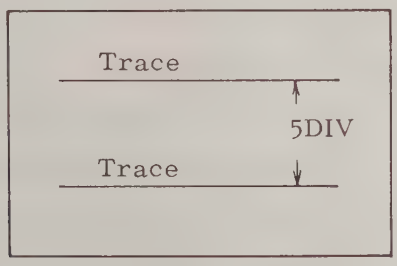

㉓ CH2 GAIN control RV133 (PEF-838)

a. Set:

V MODE:	CH2
SOURCE OR X:	CH1
TRIG MODE:	AUTO (Free-running scan)
CH2 VOLTS/DIV:	10 mV
A TIME/DIV:	A = 0.1ms
CH2 input:	Same as CH1 input ㉑ .

b. Adjust CH2 GAIN control RV133 (PEF-838) so that the amplitude of the square wave is 5 div at the center on the screen.

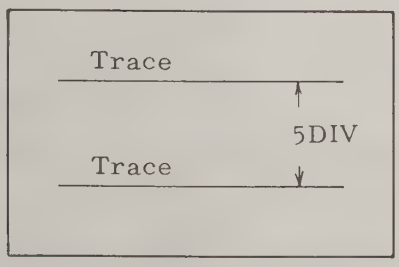

㉔ CH1 HF COMP CV517, CV556, CV515 (PEF-785)

a. Set:

V MODE:	CH1
CH1 AC/DC:	DC
CH1 VOLTS/DIV:	10 mV/DIV
CH1 input:	Use the Tektronix's PG-506 pulse generator or equivalent. When the PG506 is in the FAST RISE mode, a square wave (Tr≦1 ns) is obtained. Connect this signal to CH1 in 50-ohm termination.

b. Adjust CV517 so that the amplitude near the rising edge is minimum.

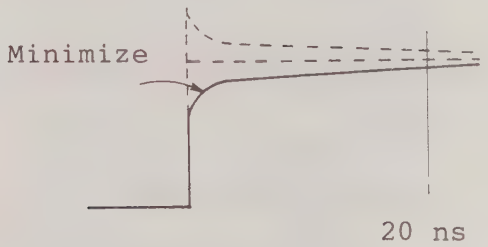

c. Adjust CV515 so that the portion near 20 ns is flat.

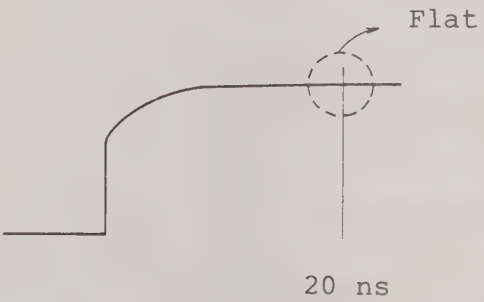

d. Adjust CV556 so that the midway point between the rising edge and 20 ns is flat.

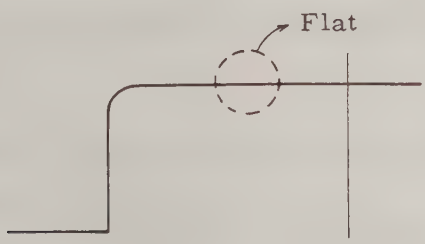

20 ns

e. Adjust CV517 and CV555 so that the portion near the rising edge is flat.

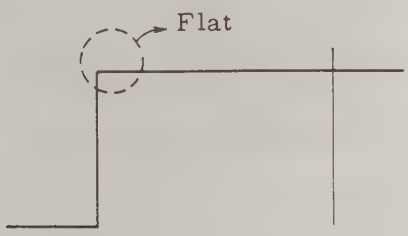

20 ns

(25) CH2 HF COMP CV160 (PEF-838)

a. Set:

V MODE:	CH2
CH2 AC/DC SW:	DC
CH2 VOLTS/DIV:	10 mV
CH2 input:	Same as CH1 input (25) .

b. Adjust CV160 (PEF-838) so that the rising edge is flat.

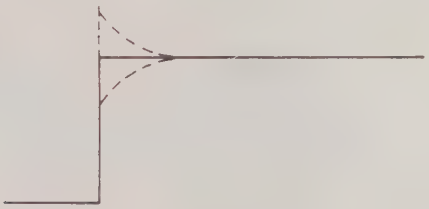

㉖ CH1 ATT CV4, CV5, CV14, CV15 (PEF-838)

(1) Attenuation characteristics
Connect the output of the PG-506 directly to CH1.

a. Set:

V MODE:	CH1
CH1 input:	Place the PG-506 in the HIGH AMPLITUDE range and connect the output (10 kHz square wave) to CH1.

b. Set CH1 VOLTS/DIV to 0.1 V. (CH1 ATTN is set to ÷10.)

c. Adjust the output amplitude control of the PG-506 so that the amplitude of the waveform is approximately 5 DIV.

d. Adjust CV5 (PEF-838) so that the top of the waveform is as flat as possible.

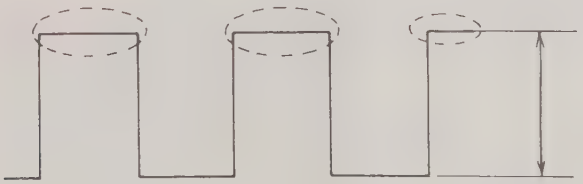

5 DIV. approx.

e. Set CH1 VOLTS/DIV to 1 V. (CH1 ATTN is set to ÷100.)

f. Adjust the output amplitude control of the PG-506 so that the amplitude of the waveform is approximately 5 DIV.

g. Adjust CV15 (PEF-838) so that the top of the waveform is as flat as possible.

(2) Input capacitance

Connect the output of the PG-506 to CH1 by a 10:1 probe.

a. Set:

V MODE:	CH1
CH1 input:	Place the PG-506 in the HIGH AMPLITUDE range and connect the output (10 kHz square wave) to CH1 by the 10:1 probe.

b. Same as b of (1).

c. Same as c of (1).

d. Adjust CV4 (PEF-838) so that the top of the waveform is as flat as possible.

e. Same as e of (1).

f. Adjust the output amplitude adjustment of the PG-506 so that the amplitude of the waveform is approximately 1 to 2 DIV on the CRT screen.

g. Adjust CV14 (PEF-838) so that the top of the waveform is as flat as possible.

(27) CH2 ATT CV104, CV105, CV114, CV115 (PEF-838)

Same as (26) except that the V MODE input and the VOLTS/DIV settings are changed to CH2.

CV104 corresponds to CV4 of (26).
CV105 corresponds to CV5 of (26).
CV114 corresponds to CV14 of (26).
CV115 corresponds to CV15 of (26).

TRIGGER

(28) TRIG SIG OUT DC LEVEL RV320 (PEF-838)

a. Set:

SOURCE OR X:	CH1
CH1 GND:	ON (Push in)

b. Connect the digital voltmeter or the instrument to TRIG SIGNAL OUT J301.

c. Adjust RV320 (PEF-838) so that the output voltage is zero volts.

The following procedures ((29) , (30) and (31)) are needed for the adjustment of the frequency response of the amplifier in the TRIG system.

(29) INT HF COMP CV305 (PEF-838)

a. Set:

H MODE:	X-Y
SOURCE OR X:	CH1 (The signal connected to CH1 enters the X-AMP.)
V MODE:	CH2 (To prevent a beam from deflecting in the vertical direction, the no-signal CH2, not CH1 with the signal connected, is selected.)
CH1 VOLTS/DIV:	10 mV
CH1 input:	When the PG-506 is in the FAST RISE mode, a 10 kHz square wave (Tr≦1 ns) is obtained. Connect this signal to CH1 in 50-ohm termination. This signal is obtained in the HIGH AMP mode. Do not terminate in 50-ohms.

b. Adjust the output control of the PG-506 so that the trace of approximately 5 DIV is displayed in the horizontal direction of the CRT screen.

c. Adjust INT HF COMP CV305 (PEF-838) so that both ends of the trace is as small as possible.

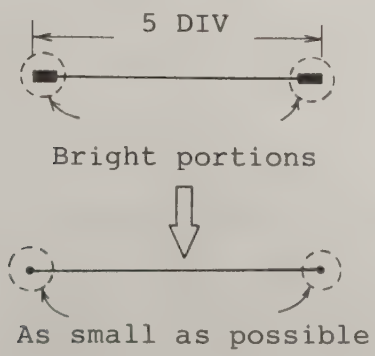

(30) EXT 1/1 HF COMP CV306 (PEF-838)

a. Set:

SOURCE OR X: EXT DC

EXT INPUT input: This signal is obtained in the HIGH AMP mode. Do not terminate in 50-ohms.

b. Same as b of (29) .

c. Adjust EXT 1/1 HF COMP CV306 (PEF-838) so that both ends of the trace are as small as possible.

(31) EXT 1/10 HF COMP CV307 (PEF-838)

a. Set:

SOURCE OR X: EXT DC ÷ 10

Other settings are the same as (30) .

b. Adjust the output control of the PG-506 so that the trace of approximately 1 DIV is displayed in the horizontal direction on the screen.

c. Adjust EXT 1/10 HF COMP CV307 (PEF-838) so that both ends of the trace are as small as possible.

(32) TRIG (+) PEAK RV685 (PEF-782)

a. Set:

SOURCE OR X:	CH1
V MODE:	CH1
TRIG MODE:	A = 20 µs
A TIME/DIV:	A = 20 µs
CH1 VOLTS/DIV:	10 mV or 20 mV
SLOPE:	(+)

TRIG LEVEL: CW

CH1 input: Square wave of approximately 50 kHz (4 DIV amplitude on the screen)

b. The trigger point is changed as shown in dotted lines by the TRIG + PEAK control. Adjust TRIG + PEAK RV685 (PEF-782) so that the trace is triggered at as high a point as possible.

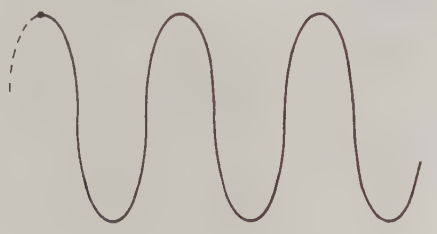

33 TRIG - PEAK RV675 (PEF-782)

a. Set:

SLOPE: -

TRIG LEVEL: CCW

Other settings are the same as 32 .

b. Adjust TRIG - PEAK RV675 (PEF-782) so that the trace is triggered at as low a point as possible.

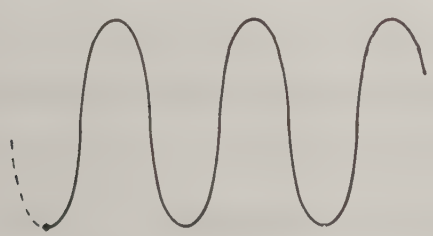

External output

㉞ PROBE ADJ RV1303 (PEF-785)

Measure the PROBE COMP output at J502 by the digital voltmeter, and adjust PROBE ADJ RV1303 (PEF-785) for 0.250 V.

CHR X

㉟ CHR X CENT RV876 (PEF-782)

a. Set:

Turn the POWER switch to off first, and then turn it back to on to initialize the microcomputer.

READOUT INTEN: As appropriate

SELECTOR: ΔT of MEASURE (Refer to SELECTOR of ⑰ - a.)

VARIABLES: Do not move.

b. Verify that "8000 ms" is displayed on the top left of the screen.

c. Adjust CHR X CENT RV876 (PEF-782) so that the distances between the center of the screen and each cursor are equal.

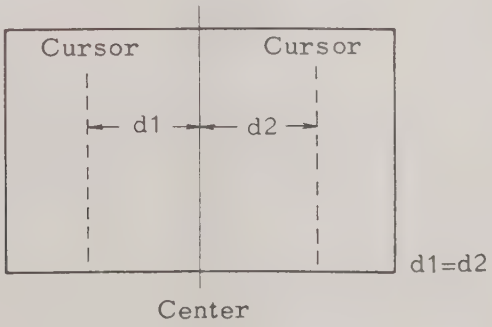

㊱ CHR X GAIN RV884 (PEF-782)

a. Set: Same as ㉟ (1).

b. Adjust CHR X GAIN RV884 (PEF-782) so that the distance between cursors is 8 DIV.

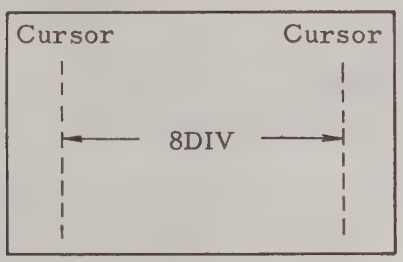

c. Perform the adjustment ㉟ again.

㊲ STORAGE SWEEP CENT RV5500 (PEF-827)

a. Set:

HOLD: ON
STORAGE MODE: NORM

b. Turn the POWER switch to OFF first, and then press the A and B switches of SAVE CH1 simultaneously.

c. When the POWER switch is turned to ON, the following test chart is displayed.

Note: When the HOLD switch is turned to OFF, this mode is released.

TRIG cursor
(0 div)

Set to 0.

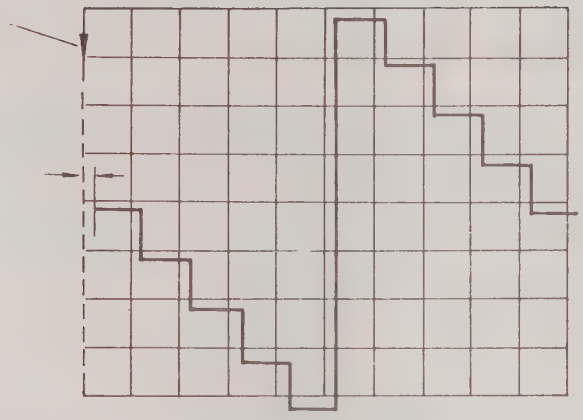

d. Adjust RV5500 (PEF-827) so that the starting point of the trace is aligned with the leftmost graticule of the CRT.

(38) STORAGE SWEEP GAIN RV5503 (PEF-827)

a. Same as a, b and c of (37)

b. Adjust RV5504 (PEF-827) so that the trace length of the test chart becomes 10 div.

c. Adjust 37 again.

(39) STORAGE Y CENT RV5502 (PEF-827)

a. Same steps a, b, and c of (37) .

b. Adjust RV5502 so that the center line of the test chart is aligned with the center graticule of the CRT.

(40) STORAGE Y GAIN RV5501 (PEF-827)

a. Same as the a, b, and c of (37) .

b. Adjust RV5501 (PEF-827) so that the amplitude of the test chart becomes 8 div.

c. Adjust (39) again.

Note: After finishing the above adjustment, perform the adjustment of X-Y OFFSET and X-Y GAIN.

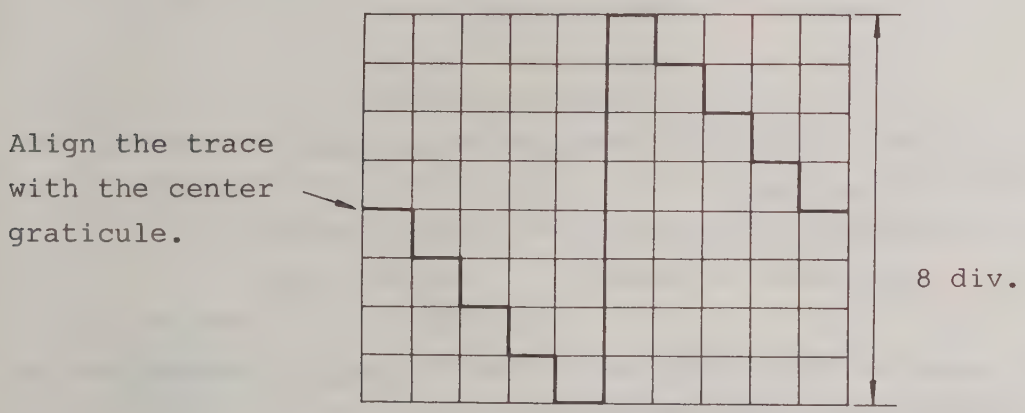

(41) REC GAIN RV7801, RV7802 (PEF-830)

a. Same as a, b, and c of (37) .

b. Measure and adjust the PLOT output by the four -or five-digit digital voltmeter as follows.
   - o Adjust PLOT Y GAIN RV7801 so that the Y output (CH1 output) becomes +9.996 V ±20 mV.
   - o Adjust PLOT X GAIN RV7802 so that the X output (CH2 output) becomes +9.996 V 20 mV.

(42) AD REF ADJ RV 6240 (PEF-825)

a. Set:

STORAGE MODE: NORM

b. Measure the voltage of TR6241 (PEF-825) by the digital voltmeter, and adjust RV5240 so that the voltage is within the range from -1995 to -2005 mV.

(43) AD CK WIDTH CV5340 (PEF-825)

a. Set:

STORAGE MODE: NORM
A TIME: 2µs
V MODE: DUAL
Instrument: Oscilloscope, V-1150
(The setting position of controls in CH1 and CH2 as follows:
VOLTS/DIV: 50 mV/div GND: +3 div
TIME/DIV: 20 ns/div x10 MAG mode

b. Measure the waveforms at the following two points by using the ground attachment.

o Set TP5303 (PEF-825) to GND, and measure the waveform Ⓐ at TP5301 (PEF-825).

o Set TP5304 (PEF-825) to GND, and measure the waveform Ⓑ at TP5302 (PEF-825).

c. Adjust CV5340 so that ⓐ : ⓑ becomes 7.50 : 2.50 in the following figure.

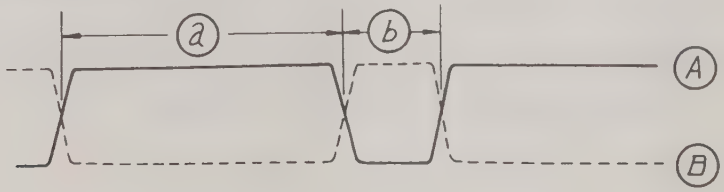

(44) S/H BALANCE RV8060, RV8061 (PEF-834)

a. Set:

CH1 INPUT : GND
CH2 INPUT : GND
MODE : DUAL

b. Turn the NON STORE switch to ON (pressed in), and adjust the V POS control so that the trace is aligned with the center graticule on the CRT screen.
After this adjustment, do not move the V POS control.

c. Place the instrument in the storage mode by turning the NORM switch to ON (pressed in).

d. Balance of CH1 side
Measure the voltage between TP8060 (PEF-834) and TP8062 (PEF-834) by the digital voltmeter, and adjust RV8060 (PEF-834) so that the voltage is within 0 V ± 10 mV.

e. Balance of the CH2 side
Measure the voltage between TP8061 (PEF-834) and TP8063 (PEF-834) by the digital voltmeter, and adjust RV8061 so that the voltage is within 0 V ± 10 mV.

(45) The voltage at the sweep starting point in the equivalent sampling range RV5450 (PEF-825)

a. Set:

STORAGE MODE : NORM
A TIME : 50 ns
V MODE : CH1
CH1 GND : ON
TRIGGER MODE : AUTO

b. Measure the voltage on pin 6 of IC (TL081), location number 10B.

c. Adjust RV5450 (PEF-825) so that the voltage at the sweep starting point is 0.3 V.

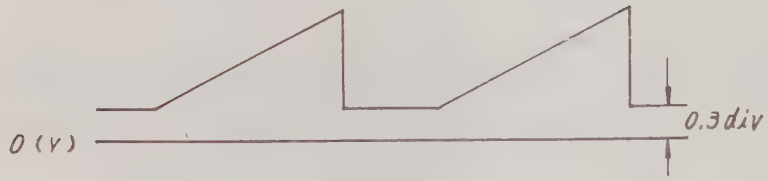

(46) Equivalent sample GAIN RV5451 (PEF-825)

a. Set:
CH1 GND : OFF
CH1 AC/DC : DC
Other settings are the same as a of (45).

b. Connect a marker of 50 ns to the instrument.

c. Adjust the TRIGGER LEVEL control to secure triggering.

d. Adjust RV5451 (PEF-825) so that markers are aligned with graticules.

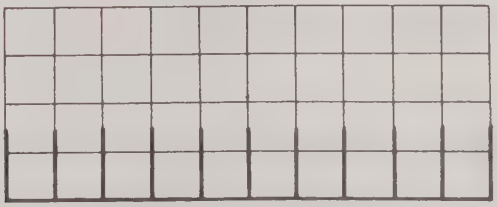

(47) CH1 A/D GAIN RV5203 (PEF-825)

a. Set:

SOURCE OR X	:	CH1
STORAGE V POS	:	OFF
V MODE	:	CH1
CH1 VOLTS/DIV	:	10 mV
A TIME/DIV	:	0.1 ms
Input signal	:	A 50 mV square waveform for calibration

b. Confirmation of an input signal
Turn the NON STORE switch to ON (pressed in), and confirm that the amplitude of a waveform is 5 div. on the CRT screen.

c. Turn the NORM switch to ON (storage mode), and adjust RV5203 (PEF-825) so that the amplitude of a waveform is 5 div. on the screen.

(48) CH1 A/D OFFSET RV5201 and RV5202 (PEF-825)

a. Set:
Same as a of (47) .

b. Adjust RV5202 (PEF-825) so that the waveform in the NON STORE mode coincides with that in the NORM mode. (Offset adjustment)

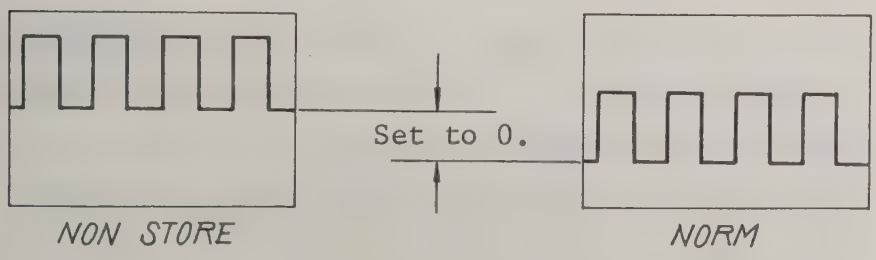

c. After placing the instrument in the NON STORE mode, turn the GND switch to ON (pressed in).

d. Adjust V POSITION so that the trace is at the center of the screen.

e. After placing the instrument in the NORM mode, set A TIME to 0.5 μ s to establish the equivalent sampling mode.

f. Adjust RV5201 (PEF-825) so that the trace is at the center of the screen.

(49) CH2 A/D GAIN RV5223 (PEF-825)

a. Set:

SOURCE OR X	:	CH2
STORAGE V POS	:	OFF
V MODE	:	CH2
CH2 VOLTS/DIV	:	10 mV
A TIME/DIV	:	0.1 ms
Input signal	:	A 50 mV square waveform for calibration

b. Confirmation of an input signal
Turn the NON STORE switch to ON (pressed in), and confirm that the amplitude of a waveform is 5 div. on the screen.

c. Turn the NORM switch to ON (storage mode), and adjust RV5223 (PEF-825) so that the amplitude of a waveform is 5 div. on the screen.

(50) CH2 A/D OFFSET RV5221, RV5222 (PEF-825)

a. Set:
Same as a of (49).

b. Adjust RV5202 (PEF-825) so that the waveform in the NON STORE mode coincides with that in the NORM mode. (Offset adjustment)

c. After placing the instrument in the NON STORE mode, turn the GND switch to ON (pressed in).

d. Adjust V POSITION so that the trace is at the center of the screen.

e. After placing the instrument in the NORM mode, set A TIME to 0.5 µs to establish the equivalent sampling mode.

f. Adjust RV5201 (PEF-825) so that the trace is at the center of the screen.

(51) CH1 LF COMP CV5203 (PEF-825)

a. Set:

STORAGE MODE	:	NORM
V MODE	:	CH1
CH1 VOLTS/DIV	:	10 mV
AC-DC	:	DC
TIME/DIV	:	2 µs or less

b. Connect a 50 khz sine wave signal of 6 div. by using the Tektronix's SG503 signal generator or equivalent.

c. Set the frequency to 32 MHz without changing the amplitude of the SG503.

d. Adjust CV5203 (PEF-825) so that the amplitude of the displayed waveform is 4.2 div. (-3 dB).

e. Set the Tektronix's PG506 pulse generator to the FAST RISE mode and connect the output square waveform to CH1 (50 Ω termination). Then confirm that overshoot is less than 4% at the 2 μs range.

(52) CH2 LF COMP CV5204 (PEF-825)

a. Set:
V MODE : CH2
CH2 VOLTS/DIV : 10 mV
Other settings are the same as a of (51).

b. Same as b of (51).

c. Same as c of (51).

d. Adjust CV5204 (PEF-825) so that the amplitude of the displayed waveform is 4.2 div (-3 dB).

e. Same as e of (51).

(53) CH1 ES COMP CV5034, CV5035 (PEF-828)

Note: ES : Equivalent sampling

a. Set:
STORAGE MODE : NORM
V MODE : CH1

CH1 VOLTS/DIV : 10 mV
AC-DC : DC
TIME/DIV : 50 ns
X10 MAG : ON (*5 ns/DIV is displayed on the screen.)
SOURCE OR X : CH1
TRIGGER SLOPE : ⊖

b. Connect a 1 MHz square waveform (Tr≦1 ns) from the Tektronix's PG506 or equivalent to CH1.

c. Adjust the TRIGGER LEVEL so that the square waveform is correctly displayed on the screen.
(It is necessary to apply a correct trigger signal to perform the equivalnt sampling.)

d. Adjust the MAG POINT position so that the rising edge of the square waveform is at the center of the screen.

e. Adjust CV5034 and CV5035 so that the overshoot is minimum and the rise time is 3.2 ns or less.

(54) CH2 ES COMP CV5078, CV5079 (PEF-828)

a. Set:
V MODE : CH2
CH2 VOLTS/DIV : 10 mV
SOURCE OR X : CH2
Other settings are the same as a of (53).

b. Connect a 1 MHz square waveform (Tr≦1 ns) from the Tektronix's PG506 pulse generator or equivalent to CH2.

c. Same as c of (53).

d. Same as d of (54) .

e. Adjust CV5078 and CV5079 so that the overshoot is minimum and the rise time is 3.2 ns or less.

Storage X - Y

(55) X-Y OFFSET RV5602 (PEF-827) in the storage X-Y mode

a. Set:
Same as a, b, and c of 37 .

b. Adjust X-Y OFFSET RV5602 so that the left side of the test waveform is aligned with 1 div. graticule.

(55) Align the left side of a test waveform with 1 div graticule.

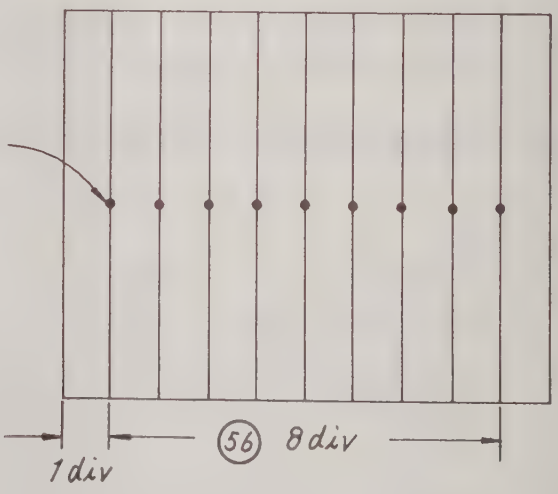

(56) X-Y GAIN RV5601 (PEF-827)

a. Set:

Same as a of (55).

b. Adjust X-Y GAIN RV5601 so that the distance between the left side and the right side of the test waveform is 8 div.

5. DETAILED CIRCUIT DESCRIPTION

5.1 VERTICAL CIRCUIT (◇1◇, ◇2◇, ◇3◇, ◇9◇)

Read the circuit description (◇12◇) to understand the following.
The detailed block diagram of this circuit is shown in Fig. 5-1. This circuit consists of the CH1 vertical circuit and the CH2 vertical circuit. These circuit configurations are almost identical. The CH1 SIG fed to J1 is routed to the CH1 INPUT COUPLING circuit, and the input-coupling modes are selected by switches S1 and S11 to AC, GND, or DC. The CH1 SIG is then fed to the CH1 1ST ATTENUATOR, and its signal level is attenuated to 1/1, 1/10 or 1/100. The attenuated CH1 SIG is fed to the CH1 INPUT AMP, and its impedance is converted (high input impedance and low output impedance).

The AC component of the CH1 SIG flows from C20 to TR25 to TR40 to TR41 to TR42, while the DC component flows from R21 to IC26 to TR28 to TR40 to TR41 to TR42.
IC26 is a DC amplifier. TR28 is a common-base transistor, and separates the AC component from the DC component to prevent them from being loaded to each other. Further, TR28 makes the load impedance of TR25 (FET) high and makes the gain of the FET 1.

When an input is zero volts, an output should also be zero volts. However, even if an input is zero volts, some offset voltage appears at the output of an actual DC amplifier.
CH1 DC BAL RV37 compensates for an offset voltage of IC26. CH1 DC GAIN RV30 changes the amount of the DC feedback, controls the DC gain, and matches the DC gain to the AC gain.
Diodes D23, D25, and D26 protect the INPUT AMP against an excessive input voltage.

The voltage gain of the INPUT AMP is 2.5 times, but it is switched to 6.25 times by switch S2-3 at the 2 mV/div range. The output of the CH1 INPUT AMP is fed to the CH1 2ND ATTENUATOR, its signal level is attenuated to 1/1, 1/2, 1/4 or 1/10 by the setting position of the VOLTS/DIV switch. The output impedance is always 150 Ω.

The PANEL STATUS (1) is a circuit for transmitting the setting state of the VOLTS/DIV switch to a microcomputer. The relationship between the overall gain and the setting position of the VOLTS/DIV switch is shown in Table 5-1.

Table 5-1

VOLTS/ DIV	1ST ATTN	INPUT AMP Gain	2ND ATTN	Overall Gain	VOLTS/DIV x Overall Gain
2 mV	1	6.25(x2.5)	1	6.25	12.5 mV/div
5 mV	1	2.5	1	2.5	12.5 mV/div
10 mV	1	2.5	0.5(÷2)	1.25	12.5 mV/div
20 mV	1	2.5	0.25(÷4)	0.625	12.5 mV/div
50 mV	1	2.5	0.1(÷10)	0.25	12.5 mV/div
0.1 V	0.1(÷10)	2.5	0.5(÷2)	0.125	12.5 mV/div
0.2 V	0.1(÷10)	2.5	0.25(÷4)	0.0625	12.5 mV/div
0.5 V	0.1(÷10)	2.5	0.1(÷10)	0.025	12.5 mV/div
1 V	0.01(÷100)	2.5	0.5(÷2)	0.0125	12.5 mV/div
2 V	0.01(÷100)	2.5	0.25(÷4)	0.00625	12.5 mV/div
5 V	0.01(÷100)	2.5	0.1(÷10)	0.0025	12.5 mV/div

At the CAL position of the CH1 VAR control, R52 is shorted. At the fully CCW position, the output of the CH1 INPUT AMP becomes less than 1/2.5 times the output at the CAL mode.
The CH1 SIG from the CH1 2ND ATTENUATOR is fed to the CH1 V.PREAMP, where the signal is converted from the single-ended signal to the paraphase signal, and then fed to the DIODE GATE (divided into ◇2◇ and ◇12◇) at the next stage.
The DC voltage at the TR58 base is changed by CH1 POS RV1604 in the circuit ◇9◇, and the vertical position of the CH1 SIG is changed.

TRIGGER PICKOFF

A part of the CH1 SIG from the CH1 2ND ATTENUATOR is fed to the TRIGGER PICKOFF(1), and becomes the CH1 TRIG SIG. The time constant of the output impedance of the TRIGGER PICKOFF(1) is equal to that of the feedback impedance of the TRIGGER AMP in the next stage (Fig. 5-2). Therefore, the impedance ratio of the two circuits is always constant independent of frequency.
The CH2 SIG is fed to the DIODE GATE via TR SW(1) or TR SW(2). The polarities of the input and output of TR SW(2) are opposite to those of TR SW(1).
When CH2 INV switch S1611 of ◇9◇ is switched to the INV side, the $\overline{\text{CH2 INV}}$ signal is pulled down by the resistor in invertor IC172, and turned to low. Then, each base of TR175 and TR176 goes high, and TR SW(2) (TR175 and TR176) turns to on. On the other hand, the TR SW(1) turns to off because the bases of TR171 and TR172 are low. Thus, the CH2 signal is fed to the DIODE GATE via TR SW(2), and the display polarity is inverted. The signal is then supplied to the DELAY LINE DRIVER. Because this driver circuit is a common-emitter voltage feedback circuit, the impedance of the input and the output is low.

The signal from the DELAY LINE is amplified by the V.AMP (1) consisting of TR501 and TR502 and the V.AMP (2) consisting of TR503 and TR504. GAIN RV505 adjusts the V. OUTPUT AMP so that its output is displayed corresponding to the deflection factor set by the VOLTS/DIV switch. Because the V.AMP (2) is a parallel feedback amplifier, the input impedance is small.
The signal fed from [11] via the DIFF.AMP(1) is added between the V.AMP(1) and the V.AMP(2).

Normally approx. +1 V for the display of the waveform is fed from [11], but the A/B SEP BIAS signal which is produced by adding some voltage to the DC voltage for the display of the waveform when the horizontal display is in the ALT sweep mode.
The CHR Y signal is fed at the timing when the characters are displayed on the CRT.
The DIFF.AMP (1) is a circuit for converting the single-ended signal into the paraphase signal.
The signal from the V.AMP (2) is fed to the cascode-V.OUTPUT AMP, and amplified up to the voltage required for the vertical deflection.
A band width limiter (BWL) circuit is provided between the V.AMP (2) and the V.OUTPUT AMP to attenuate the frequency of more than 20 MHz.

5.2 CALIBRATOR (◇3◇)

For this circuit, refer to Fig. 5-1.
IC1301 is a clock generator, and its oscillation frequency is determined by R1301, R1302, and C1302.
The 2 kHz frequency oscillated by R1301, R1302 and C1302 is counted down to 2:1 by IC1301, and a symmetrical 1 kHz square waveform is fed out from pin 4 of IC1301.
The output level of IC1301 is adjusted by RV1303 so that the output from CAL J502 becomes 0.5 Vp-p.

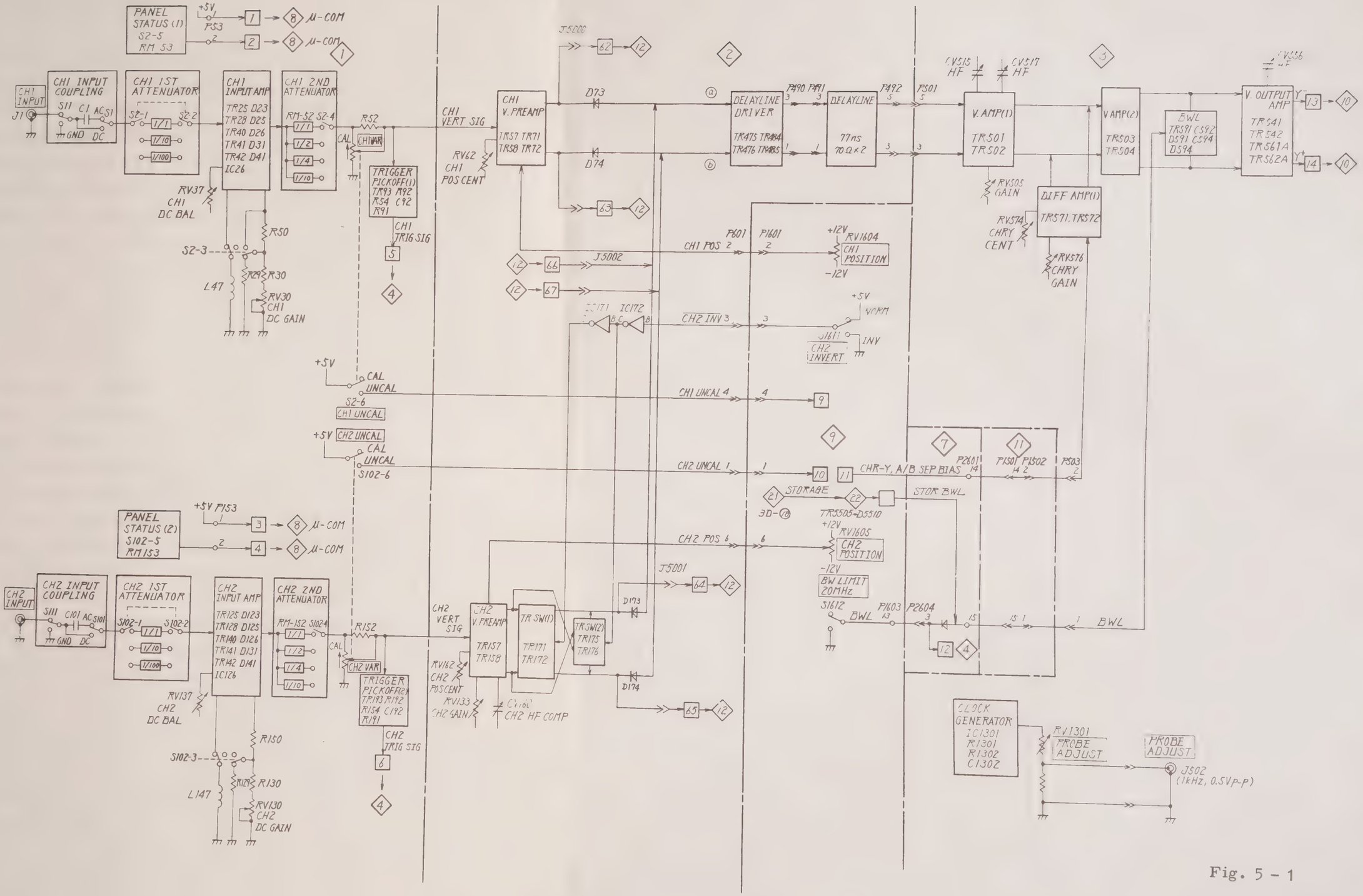
PANEL STATUS (1) S2-5 RM 53
+5V PS3
μ-COM
CH1 INPUT
J1
CH1 INPUT COUPLING
S11 C1 AC S1
GND DC
CH1 1ST ATTENUATOR
S2-1 S2-2
1/1 1/10 1/100
CH1 INPUT AMP
TR25 D23 TR28 D25 TR40 D26 TR41 D31 TR42 D41 IC26
CH1 2ND ATTENUATOR
RM-S2 S2-4
1/1 1/2 1/4 1/10
RS2
CAL
CH1 VAR
RV37 CH1 DC BAL
R50
S2-3
L47
R29 R30
RV30 CH1 DC GAIN
TRIGGER PICKOFF(1) TR93 R92 RS4 C92 R91
CH1 TRIG SIG
CH1 VERT SIG
RV62 CH1 POS CENT
CH1 V. PREAMP
TR57 TR71 TR58 TR72
J5000
D73
D74
DELAYLINE DRIVER
TR475 TR484 TR476 TR485
DELAYLINE
77ns 70Ω×2
P490 P491 P492
P501
CV515 HF
CV517 HF
V. AMP(1)
TR501 TR502
RV505 GAIN
DIFF AMP(1)
TR571 TR572
RV574 CHRY CENT
RV576 CHRY GAIN
V AMP(2)
TR503 TR504
BWL
TR591 C592 D591 C594 D594
CV536 HF
V. OUTPUT AMP
TR541 TR542 TR561A TR562A
J5002
P601 P1601
CH1 POS
+12V
RV1604
CH1 POSITION
-12V
J5001
IC171 IC172
CH2 INV 3
+5V WORM
S1611
CH2 INVERT
INV
CH1 UNCAL 4
CAL UNCAL
S2-6
CH1 UNCAL
+5V CH2 UNCAL
S102-6
CH2 UNCAL 1
CHR-Y, A/B SEP BIAS
P2601 P1501 P1502 P503
STORAGE
3D-76
TR5505→D5510
STOR BWL
CH2 POS 6
+12V
RV1605
CH2 POSITION
-12V
BW LIMIT 20MHz
S1612
BWL
P1603 P2604
PANEL STATUS (2) S102-5 RM153
+5V P153
μ-COM
CH2 INPUT
CH2 INPUT COUPLING
S111 C101 AC S101
GND DC
CH2 1ST ATTENUATOR
S102-1 S102-2
1/1 1/10 1/100
CH2 INPUT AMP
TR125 D123 TR128 D125 TR140 D126 TR141 D131 TR142 D141 IC126
CH2 2ND ATTENUATOR
RM-152 S102-4
1/1 1/2 1/4 1/10
R152
CAL
CH2 VAR
RV137 CH2 DC BAL
R150
S102-3
L147
R129 R130
RV130 CH2 DC GAIN
TRIGGER PICKOFF(2) TR193 R192 R154 C192 R191
CH2 TRIG SIG
CH2 VERT SIG
RV162 CH2 POS CENT
RV133 CH2 GAIN
CH2 V. PREAMP
TR157 TR158
TR SW(1)
TR171 TR172
TR SW(2)
TR175 TR176
D173
D174
J5001
CH2 HF COMP
CLOCK GENERATOR
IC1301 R1301 R1302 C1302
RV1301 PROBE ADJUST
PROBE ADJUST
J502 (1kHz, 0.5Vp-p)

Fig. 5 - 1

5.3 TRIGGER CIRCUIT (◇4◇, ◇9◇)

The detailed block diagram of this circuit is shown in Fig. 5-2. The trigger-coupling modes selected by TRIG OR X SOURCE are CH1, CH2, AC, DC, DC÷10, or LINE. The TRIG SIG is supplied from [5] in the CH1 mode, from [6] in the CH2 mode, from [15] in the LINE mode, and from EXT INPUT J301 in the other modes. The TRIG SIG from the TRIGGER COUPLING is fed to the TRIG AMP and is amplified to the fixed signal level. The polarities at the input and output of TRIGGER AMP are opposite. The AC component of the TRIG SIG flows from TR320 to TR325 to TR330, while the DC component flows from R320 to IC320 to TR325 to TR330. TRIG DC BAL RV320 adjusts the offset voltage of IC320, and the feedback impedance of the TRIGGER AMP consists of R350, R304, and CV305. As for the TRIGGER AMP, refer to TRIGGER PICKOFF in 5.1 VERTICAL CIRCUIT. The TRIG SIG from the TRIGGER AMP is supplied to the TRIGGER SHAPER, (+) PEAK DETECTOR, (-) PEAK DETECTOR, and AMP(1).
The bandwidth of the TRIG SIG can be limited, if necessary. In other words, when BW switch S1612 (◇9◇) is pressed, the $\overline{\text{BWL}}$ signal from [12] goes high and switching transistor TR601 is on. Then, the high frequency component of the TRIG SIG is by-passed to GND via C601 and C602, and the bandwidth is limited.

The TRIGGER SHAPER is a comparator with a hysterisis characteristics, and feeds out the trigger pulses to ① and ② by comparing the TRIG LEVEL set by TRIG LEVEL RV163 in ◇9◇ with the TRIG SIG. The polarities of the trigger pulses are opposite each other. The (+) PEAK voltage of the TRIG SIG is fed to ⓐ by the (+) PEAK DETECTOR, and the (-) PEAK voltage is fed to ⓓ by the (-) PEAK DETECTOR. Therefore, the voltages at ⓐ and ⓓ are changed by the minimum and maximum voltages of the TRIG SIG.

On the other hand, the positive fixed voltage is generated at ⓑ , and the negative fixed voltage is generated at ⓔ . The voltage at ⓐ or ⓑ is fed to ⓒ , and the voltage at ⓓ or ⓔ is fed to ⓕ . The supplied voltages are determined by TRIG MODE S690 in ◇3◇ .

When the TRIG MODE is at AUTO, the voltage at ⓐ (the positive peak voltage of the TRIG SIG) is fed to ⓒ , and the voltage at ⓓ (the negative peak voltage of the TRIG SIG) is fed to ⓕ of TRIG LEVEL RV163 in ◇9◇ with the amplitude of the trigger signal, and it is easy to set the trigger level.

When the TRIG MODE is at NORM, TV-V, or TV-H, the voltage at ⓑ (the positive fixed voltage not affected by the minimum and maximum voltages of the TRIG SIG) is fed to ⓒ , and the voltage at ⓔ (the negative fixed voltage) is fed to ⓕ . Therefore, the variable range of TRIG LEVEL RV163 in ◇9◇ is constant independent of the amplitude of the trigger signal. Information on the TRIG MODE selection is transmitted to the circuits ◇5◇ and ◇9◇ via INVERTER TR694.

AMP(1) is a negative feedback amplifier. The polarity of the TRIG SIG is inverted here. The inverted TRIG SIG is sent to the TV SYNC SEPARATOR, ◇7◇ , and TRIG SIG OUT J302. In the SYNC SEPARATOR, the SYNC component of the TRIG SIG is separated regardless of the horizontal and vertical sync signals.

When the TRIG MODE is at AUTO or NORM, TR636 of TR SW(1) is on, the base of TR634 is grounded, and the TR SW(2) turns off. Therefore, the output of the TV SYNC SEPARATOR can not pass through the TR SW(2).

When the TRIG MODE is at TV-V or TV-H, the TR SW(1) is off, and the TR SW(2) turns on. Therefore, the output of the TV SYNC SEPARATOR can pass through the TR SW(2).

When the TRIG MODE is at TV-V, one side of C634 is grounded, and R634 and C634 compose an integrating circuit. As a result, the H SYNC is interrupted, and only the V.SYNC passes through

the TR SW(2).

The TRIGGER SLOPE SWITCH consists of the two current switch circuits. One consists of TR650 and TR651, and the other consists of TR652 and TR653.

When TRIG MODE S690 is at AUTO or NORM, +12 V is supplied to SLOPE S1610. When SLOPE S1610 is switched to the ⊕ SLOPE side, +12 V is supplied to the current switch circuit consisting of TR650 and TR651, and the voltage at ① is fed out from the TRIGGER SLOPE SWITCH.

When the TRIG MODE is at AUTO or NORM and SLOPE S1610 is switched to ⊖ SLOPE side, +12 V is supplied to the current switch circuit consisting of TR652 and TR653, and the voltage at ② is fed out from the TRIGGER SLOPE SWITCH. When the ⊕ SLOPE is selected, +12 V is supplied to the current switching circuit consisting of TR650 and TR651, and the voltage at ① is fed out from the TRIGGER SLOPE switch. When the TRIG MODE is switched to TV-V or TV-H, +12 V is not supplied to any current switch circuit, and the voltage at neither ① nor ② is fed out from the TRIGGER SLOPE SWITCH. In this case, as stated above, the voltage at ③ (H.SYNC or V.SYNC) is fed out from 19 via the TR SW(2). Thus, one of the signals ①, ②, and ③ is fed out from 19 and 20 as a TRIG PULSE by the combination of TRIG MODE S690 and SLOPE S1610.

TRIGGER COUPLING
S301
TRIG SIG
CH1
CH2
EXT AC
EXT DC
EXT DC÷10
LINE
EXT 1/1 HF COMP
R313 C313
R314 CV306
R303 1M
EXT INPUT
J301
C302
R352 111K
R307
CV307
EXT 1/10 HF COMP
R312 900K
LINE TRIG
R310
C310
P1501① P2601①
P2610 P613

TRIGGER AMP
R350
R304
CV305 INT HF COMP
TR320 TR325 TR330 D320, D321, D322 IC320
RV320 TRIG DC BAL
TRIG SIG
C601 100P
TR601
C602 0.1
+12V

TRIGGER SHAPER
TR604 TR605 IC610
P5006 J5006 P613 P2610
TRIG LEVEL
TRIGGER SLOPE SWITCH
TR650 TR651 TR652 TR653
TRIG PULSE
SLOPE ⊖
SLOPE ⊕
BWL
P2604⑤ P1603⑬
P601 P1601
P2602 P1602
SLOPE S1610
RV1603
TRIGGER LEVEL

⊖PEAK DETECTOR
TR620 TR621
TRIG ⊖PEAK
⊖TRIGGER LEVEL SW
IC670 D675
R671
R672
RV675 TRIG ⊖PEAK
D692
+12V

⊕PEAK DETECTOR
TR625 TR626
TRIG ⊕PEAK
⊕TRIGGER LEVEL SW
IC680 D685
R682
R681
-12V
RV685 TRIG ⊕PEAK

AMP (1)
TR362 TR363 TR365 D365
TV SYNC & X SIG
TV SYNC SEPARATOR
TR632 D630 D631 D632 D633
R634
C634
TR SW
TR634 TR636
TRIG MODE S690
AUTO
NORM
TV-V
TV-H
TV 8
IC694
P2603⑤ P1603⑤
TRIG SIG OUT J302
P301
X SIG

Fig. 5 - 2

5.4 SWEEP CYCLE (◇5◇)

This circuit is provided to perform a cycle sweep, which is one of the major features of this oscilloscope. Since the sweep circuit and the hold-off circuit are operated independently, the cycle time (= sweep time + hold-off time) can be fixed. In other words, when the TRIGGER LOCK control on the front panel is pressed (the cycle lock on mode), the cycle time is fixed by the microcomputer and a stable trigger is obtained regardless of the sweep time (TIME/DIV range).

The main operation of this circuit is described below, using to the simplified circuit diagram shown in Fig. 5-3.

(1) The sweep state (the trigger sweep or the free-running sweep) is determined by the state of the signal on pin 2 of IC661 (3/4). In the trigger sweep mode, pin 3 goes high and D665 turns to off because pin 2 is .

(2) When the hold-off voltage $\overline{\text{HOLD OFF}}$ goes low, DELAY GATE (CYCLE GATE) IC660 (2/2) is reset, and $\overline{Q2}$ goes high.

(3) When $\overline{Q2}$ goes high, D664 is off, and the $\overline{\text{DLY GATE}}$ signal goes high.

(4) Thus, switching transistor TR2010 turns on, and the gate voltage of BUFFER TR2060 is set to the starting level of the DELAY RAMP.

(5) When the hold-off period finishes, the $\overline{\text{HOLD OFF}}$ changes from low to high. In other words, IC660 (2/2) is released from the reset state and is in the wait state.

(6) When the TRIG PULSE is fed to T2 from [20], $\overline{Q2}$ changes from high to low during the rising edge of the TRIG PULSE.

(7) When $\overline{Q2}$ goes low, D664 is on, and the $\overline{\text{DLY GATE}}$ signal is low.

(8) Then TR2010 turns to off, delay capacitor C_{DLY} (C2012 // C2013) starts to be charged, and the gate voltage of BUFFER TR2060 starts to increase.
The charging current is supplied from the delay current source, and the current value is changeable by the TIME/DIV setting. When the TIME/DIV setting value is set, the constant charging current flows in C_{DLY}. As a result, the gate voltage of TR2060 increases linearly.
The delay current signal from [26] is an analog voltage to determine the delay current. The voltage is held by C2017, and is applied to pin 10 of IC2040 (3/4) through the filter consisting of R2015 and C2015.

(9) Portion of the output of BUFFER TR2060 is sent to COMPARATOR IC2050 (2/2) as a DELAY RAMP signal. In this comparator, the output levels of ACTIVE FILTER IC2040 (1/4) and the DELAY RAMP signal are compared. When the DELAY RAMP signal level exceeds the output level of the ACTIVE FILTER, the output of the COMPARATOR goes low. Accordingly, the $\overline{\text{DLY TRIG}}$ signal goes low. In the B sweep mode, the sweep starts after the predetermined delay time from the trigger point. Either the DLY REF signal from [37] or the DLY PRESET signal from [38] is fed to the ACTIVE FILTER.
The DLY REF signal is fed to the ACTIVE FILTER in the normal delay mode, and the DLY PRESET signal is fed to the ACTIVE FILTER in the automatic calibration mode. The DLY

REF signal is the voltage corresponding to the delay time set by the controls on the front panel.
The other portion of the output of BUFFER TR2060 is fed to COMPARATOR TR2063, and used to detect the maximum voltage of the DELAY RAMP signal. Normally, the output of COMPARATOR TR2063 is high, the output ($\overline{Q}$) of RS LATCH IC2052 3/3 is low, and the output ($\overline{\text{HOLD OFF}}$) of IC2052 2/3 is high. When the DELAY RAMP signal reaches the maximum value, the output of COMPARATOR TR2063 goes low (because TR2063 turns to on.).
Therefore, the RS LATCH is reset, $\overline{Q}$ goes high, and the $\overline{\text{HOLD OFF}}$ signal goes low.

(10) As a result, DELAY GATE (CYCLE GATE) IC660 2/2 is reset, $\overline{Q2}$ signal goes high. This state is the same as that of step (3). Then D664 turns to off, TR2010 turns to on, and the gate voltage of BUFFER TR2060 is set to the start level of the DELAY RAMP. Moreover, the output of COMPARATOR TR2063 returns to high.

(11) Next, the circuit related to the HOLD OFF RAMP signal is described below.
When the $\overline{\text{DLY GATE}}$ is low, TR2040 is on, and the collector voltage of TR2045 remains at the start level of the HOLD OFF RAMP signal.

(12) The integration of the DELAY RAMP signal finishes before the output of TR2063 described in step (10) goes high, and TR2040 changes from on to off. At this time, the integration of the HOLD OFF RAMP starts.

(13) TR2040 turns to off, HOLD OFF CAPACITOR C_{HO} (C2042 // C2043) begins to be charged, and the collector voltage of TR2045 begins to increase. The charging current is sup-

plied from the HOLD OFF CURRENT SOURCE. This current value is changeable by the TIME/DIV setting value. When the TIME/DIV setting value is set, the constant charging current begins to flow, and the collector voltage of TR2045 increases linearly.

(14) The collector voltage of TR2045 and the VAR H/O voltage fed via VOLTAGE FOLLOWER IC2040 (4/4) are compared by COMPARATOR IC2050 (1/2) in the next stage. The VAR H/O voltage corresponds to the setting value of the VARIABLES and HOLD OFF controls on the front panel.

(15) When the HOLD OFF RAMP voltage (the collector voltage of TR2045) exceeds the VAR H/O voltage, the output of COMPARATOR IC2050 (1/2) goes low.

(16) Thus, RS LATCH IC2052 (3/3) is in the set state, and $\overline{Q}$ goes low.

(17) As a result, $\overline{\text{HOLD OFF}}$ (the output of IC2052 2/3) goes high, and the period of the holdoff finishes.
In case of the single sweep, the collector voltage of TR2045 is clamped on the clamp voltage (the voltage obtained by dividing 5 V by R2080 and R2081) by clamp circuit TR2080 so as not to operate the hold-off circuit.

Circuits related to the sweep

(i) A SWEEP

(a) Since the $\overline{A}$ signal from 25 is low, the output from pin 11 of IC661 (1/4) is high, and TR661 is on. Therefore, the $\overline{\text{DLY TRIG}}$ signal cannot pass the differentiation circuit consisting of C669 and R669A in the next stage and S1 of SWP GATE IC660 (1/2) remains

high. This is because only the rapid changing component of the signal can pass the differentiation circuit. In other words, in the A SWEEP the route of the $\overline{\text{DLY TRIG}}$ signal is not used.

(b) Moreover, since the output from pin 11 of IC661 (1/4) is high, D660 turns to off, and pin 9 of IC659 goes high. In case of the trigger sweep, pin 3 of IC661 (3/4) is also high, and D661 is off.

(c) When $\overline{Q2}$ changes from high to low under the above state, the output from pin 8 of IC659 changes from low to high. That is, when T1 of SWEEP GATE IC660 (1/2) changes from low to high, Q1 changes from low to high, and the $\overline{\text{SWP GATE}}$ signal from $\overline{Q1}$ changes from high to low. Thus, the sweep begins.

(ii) B SWEEP

(a) Since the $\overline{A}$ signal from 25 is high, the output from pin 11 of IC661 (1/4) goes low.

(b) Therefore, D660 is on, and pin 9 of IC659 goes low. The output of pin 8 remains high independent of the state of pin 10 of IC659. In case of the B SWEEP the route of S1 is not used.

(c) On the other hand, the output from pin 11 of IC661 (1/4) is low, and TR661 becomes off.

(d) Therefore, when the $\overline{\text{DLY TRIG}}$ signal changes from high to low, the change is applied to terminal S of SWEEP GATE IC660 (1/2) through the differentiation circuit.

(e) As a result, IC660 (1/2) turns to the set state, Q1 changes from low to high, and $\overline{Q1}$ changes from high to low. Thus, the B SWEEP begins.

The DLY ADJUST signal from [21] is the signal for the automatic calibration of the delay time. Though the delay time is controlled by a screwdriver adjustment in conventional oscilloscopes, in this oscilloscope, the delay time is calibrated automatically by the built-in microcomputer when the power switch is turned on.

AUTO GATE circuit

(A) NORM mode (trigger sweep)

The $\overline{\text{AUTO}}$ signal from [18] is high, and TR660 is on. Pin 2 of IC661 (3/4) goes low, and pin 3 goes high. Therefore, D665 turns to off, the AUTO GATE circuit does not function in the NORM mode.

(B) Auto mode

The $\overline{\text{AUTO}}$ signal from [18] goes low. There are two kinds of sweep in the AUTO mode: the trigger sweep and the free-running sweep.

(a) Trigger sweep

① When the TRIG PULSE is supplied to T2, Q2 changes from low to high during the rising edge of the pulse.

② When Q2 goes high, TR660 turns to on, C664 is shorted, and pin 2 of IC661 (3/4) remains low.

③ When the DELAY RAMP signal voltage reaches the maximum, the $\overline{\text{HOLD OFF}}$ signal is low, and the hold-off period begins.

④ When the $\overline{\text{HOLD OFF}}$ signal goes low, Q2 changes from high to low, and TR660 turns to off. On the other hand, D663 turns to on, the anode side of D662 goes low, and D662 becomes off. Therefore, C664 is not charged. Pin 2 of IC661 (3/4) remains low.

⑤ When the hold-off period finishes, the $\overline{\text{HOLD OFF}}$ changes from low to high, D663 turns to off, D662 turns to on, and C664 begins to be charged.

⑥ As a result, the voltage on pin 2 of IC661 (3/4) increases gradually. However, the trigger pulse is repeatedly fed to pin 2 of IC661 (3/4) before the voltage reaches the threshold level, and the low level, namely the trigger sweep state, is maintained.

(b) Free-running sweep

If TRIG PULSE is not fed when the voltage on pin 2 of IC661 (3/4) reaches the threshold level in the above description (a) ⑥ (even when pin 2 changes from low to high), the free-running sweep begins.

In other words, when pin 2 goes high, pin 3 goes low, and D661 and D665 turn to on. When D661 is on, pin 9 of IC659 goes low, pin 8 goes high, and the sweep begins. When D665 turns to on, the $\overline{\text{DLY GATE}}$ signal goes low, and the DELAY RAMP signal is generated.

COUNTER circuit IC2170 (1/2, 2/2)

When the TRIG PULSE is fed to T3, the divided-by-two pulse is fed out from Q3, and the divided-by-four pulse is fed out from Q4. These pulse are sent to the microcomputer and used to count the frequency of the trigger pulse. The waveform of 1.6 to 4 cycles is displayed on the CRT in the AUTO range mode.

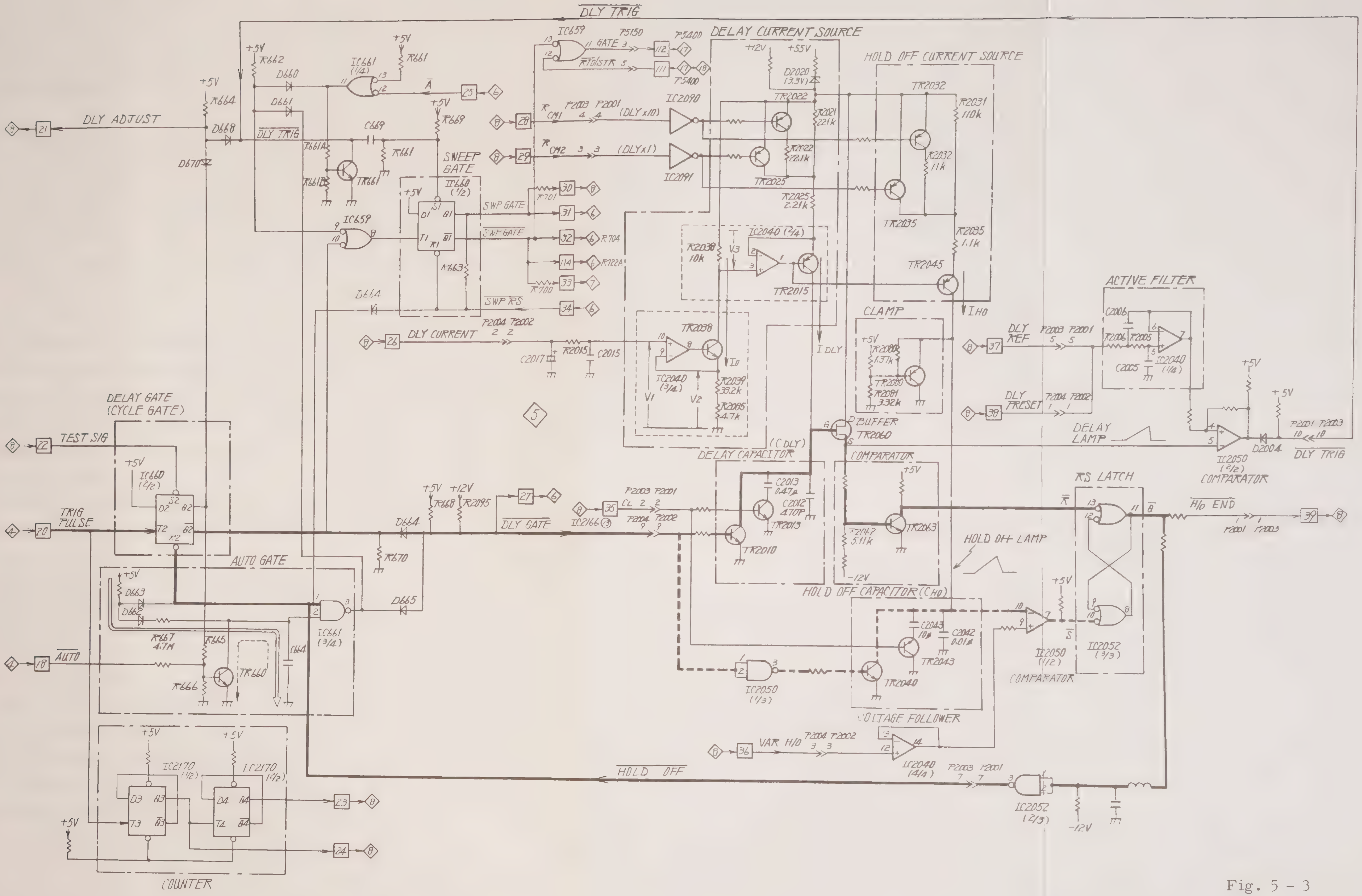
DLY TRIG
DELAY CURRENT SOURCE
HOLD OFF CURRENT SOURCE
DLY ADJUST
SWEEP GATE
SWP GATE
SWP RS
DLY CURRENT
DELAY GATE (CYCLE GATE)
TEST SIG
TRIG PULSE
AUTO GATE
AUTO
DLY GATE
CLAMP
BUFFER
DELAY CAPACITOR
COMPARATOR
ACTIVE FILTER
DLY REF
DLY PRESET
DELAY LAMP
RS LATCH
H/O END
HOLD OFF LAMP
HOLD OFF CAPACITOR (CHO)
VOLTAGE FOLLOWER
VAR H/O
HOLD OFF
COUNTER

Fig. 5 - 3

5.5 SWEEP (◇6◇)

The detailed block diagram of this circuit is shown in Fig. 5-4.
When the sweep begins, the $\overline{\text{SWP GATE}}$ signal entered at [32] changes from high to low, and the SWP GATE signal entered at [31] changes from low to high. Accordingly, diodes D710, D711, and D712 turn to off. The TIMING CAPACITOR (C_T) is provided between the input and the output of the INVERTING AMP consisting of TR710, TR712, and TR714 to form an miller integrator.

The integration current I_T is determined by the input voltage of IC730 and the timing resistors (R_T), which are determined by the TIME/DIV setting. The value of C_T is determined by C710 // C711 or C710 // C711 // C715. The value of R_T is determined by R740, R740 // R741, R740 // R743 or R740 // R745. When diodes D710, D711, and D712 turn to off, the integration current I_T begins to flow to the TIMING CAPACITOR C_T, and the voltage of C_T begins to increase linearly corresponding to I_T.

The output voltage of the INVERTING AMP is fed out from [39] as the SWP OUT signal via ANALOG SW2 IC717. Part of the output voltage of the INVERTING AMP is fed to voltage comparator TR723 via ANALOG SW2 IC717, and the maximum voltage of the SWP OUT signal is determined by comparing the output voltage of the INVERTING AMP with the base voltage of TR723. When TR723 detects the maximum voltage, its collector voltage turns to low, and the $\overline{\text{SWP RS}}$ signals fed from [34] and [49] also turn to low. The $\overline{\text{SWP RS}}$ signal is applied to FF IC660(1/2) (13) shown in ◇5◇ , and turns the output of the SWP GATE to high.

When the $\overline{\text{SWP GATE}}$ goes high and the SWP GATE goes low, diodes D710, D711, and D712 turn to on. The input and the output of the INVERTING AMP are thus shorted, and the TIMING CAPACITOR C_T discharges rapidly.

As a result, the output voltage of the INVERTING AMP falls down to the voltage at the beginning of the sweep, voltage comparator TR723 turns to off, and the collector voltage of TR723 is reset to high.
The CS A DATA signal entered at 44 is a DC voltage (analog value) corresponding to the A sweep, and the CS B DATA signal entered at 45 is a DC voltage (analog value) corresponding to the B sweep. The CS A and CS B DATA signals are changed by the TIME/DIV setting, and accordingly, the voltage V_T of the V_T/I_O CONVERTER is changed. The TIME/DIV setting is changed to 1:2:5 by changing the voltage V_T. The figures of the TIME/DIV setting value are determined by changing the value of the timing resistor R_T to 1:10:100:1000.

The Q_E output ($\overline{A}$) of SHIFT REGISTER IC2165 controls ANALOG SW1 IC717 via IC738. The CS A DATA signal and the CS B DATA signal are supplied to the V_T/I_O CONVERTER in the A sweep mode and in the B sweep mode, respectively. V_T is a voltage corresponding to the CS A DATA signal or the CS B DATA signal, and the current I_O corresponding to V_T flows across R732. The resulting voltage V_O is fed to the V_O/I_T CONVERTER and the output current I_T corresponding to V_O flows to the TIMING RESISTOR R_T. The V_T/I_T CONVERTER consists of the V_T/I_O CONVERTER and the V_O/I_T CONVERTER, and the current I_T corresponding to the CS A DATA signal or the CS B DATA signal is obtained. Since I_T is fed to the miller integrator, the SWP OUT signal corresponding to the CS A DATA signal or the CS B DATA signal is obtained.

R_{T1}, R_{T2}, and R_{T3} fed from Q_B, Q_C, and Q_D of SHIFT REGISTER IC2165 are control signals to switch the timing resistor R_T. R_{T1}, R_{T2}, and R_{T3} are supplied to switching transistors TR745, TR743 and TR741 via LEVEL SHIFT TR750, TR751, and TR752, respectively, and the value of R_T is determined. Only the A sweep is provided with the SWP VAR function, and the voltage value of the CS A DATA signal is changed continuously by the microcomputer.

IC2165 is an 8-bit shift register having serial inputs and parallel outputs. The 8-bit shift register and the latch are packed onto a single chip. The S DATA signal fed to the SER is shifted to the register bit by bit during every rising edge of the shift register clock S CLK2 signal fed to the SRCK. The 8-bit data in the register is transferred simultaneously to the latch circuit during the rising edge of the register clock pulse entered at RCK and the latch data is updated. (While the S DATA signal is being acquired, Q_A to Q_H are being held in the previous state and the data on Q_A to Q_H is updated during the rising edge of RCK.) The shift register and the latch circuit (storage register) have the individual clear signals (shift register clear $\overline{\text{SRCLR}}$ signal and register clear $\overline{\text{RCLR}}$ signal). The clear signals are synchronized with the clock pulse when they are high.

The S DATA signal from [42] switches the TIME/DIV setting and the vertical channel. The clock pulse S CLK2 is fed from [43] only when the content of the S DATA is changed.
The S CLK2 pulse is generated by PC2 and PC6 pulses fed out from IC3101 of the microcomputer shown in ◇8◇ . PC2 is a clock pulse being fed out continuously. PC6 is a clock enable signal and controls the clock pulse P2. The passage of the clock pulse through the gate circuit (IC2107 of ◇8◇) is controlled by the PC6 signal. The colck pulse passing the gate circuit (IC2107 shown in ◇8◇) is an S CLK2 pulse.

The route of a register clock pulse fed to the RCK terminal (pin 12) of SHIFT REGISTER IC2165 is different in the normal sweep mode and in the non-sweep mode (mainly in the X-Y mode).

(1) When the sweep is performed

When the $\overline{\text{DLY GATE}}$ signal from 27 changes from low to high, the register clock pulse fed to the RCK terminal changes from low to high, and the 8-bit data in the register is transferred simultaneously to the latch circuit during the rising edge of the register clock pulse. Strictly speaking, since the $\overline{\text{DLY GATE}}$ signal passes through the differentiation circuit consisting of C2167 and R2167, and gate circuit IC2162 (2/4), the register clock pulse changes from low to high after the $\overline{\text{DLY GATE}}$ signal has changed from low to high. This is because the latch data is updated when the hold-off period begins com-pletely.
The PC6 signal from 40 changes the state of pin 5 of IC2162 (2/4), and controls the transmission of the change of the $\overline{\text{DLY GATE}}$ signal to the RCK terminal. When the updating of the latch data is prohibited, namely when a new S DATA is being sent, PC6 from 40 is high. Therefore, pin 5 of IC2164 (2/4) goes low, and the change of the $\overline{\text{DLY GATE}}$ signal cannot pass throuth the gate circuit IC2162 (2/4).
When all the data of 8-bit S DATA is shifted to the shift register, and the sweep is finished, data is transferred from the shift register to the latch circuit.

(2) When the sweep is not performed (mainly in the X-Y mode)

The microcomputer controls the transmission of the latch data directly. When the data is updated, a negative pulse is fed from 41 .

The output of Q_H is sent to microcomputer IC3101 in ◇8◇ via [47] , and informs the microcomputer of the latch state. The S DATA fed to $Q_{H'}$ is fed to the front panel board via [48] . The LED's (D1601, D1602, and D1605 to D1611 in ◇9◇) on the panel are blinked by this output of $Q_{H'}$.

TR708 and TR709 are switching transistors. When the TIME/DIV switch is set to 0.5 ms or 0.2 ms, the Q_A and Q_B outputs of SHIFT REGISTER IC2165 are low and high, respectively, and TR708 and TR709 become on. Thus, R703 is shorted, and the current flowing across R703A increases. As a result, the reset duration of the sweep waveform can be made short, and a brighter waveform can be observed.

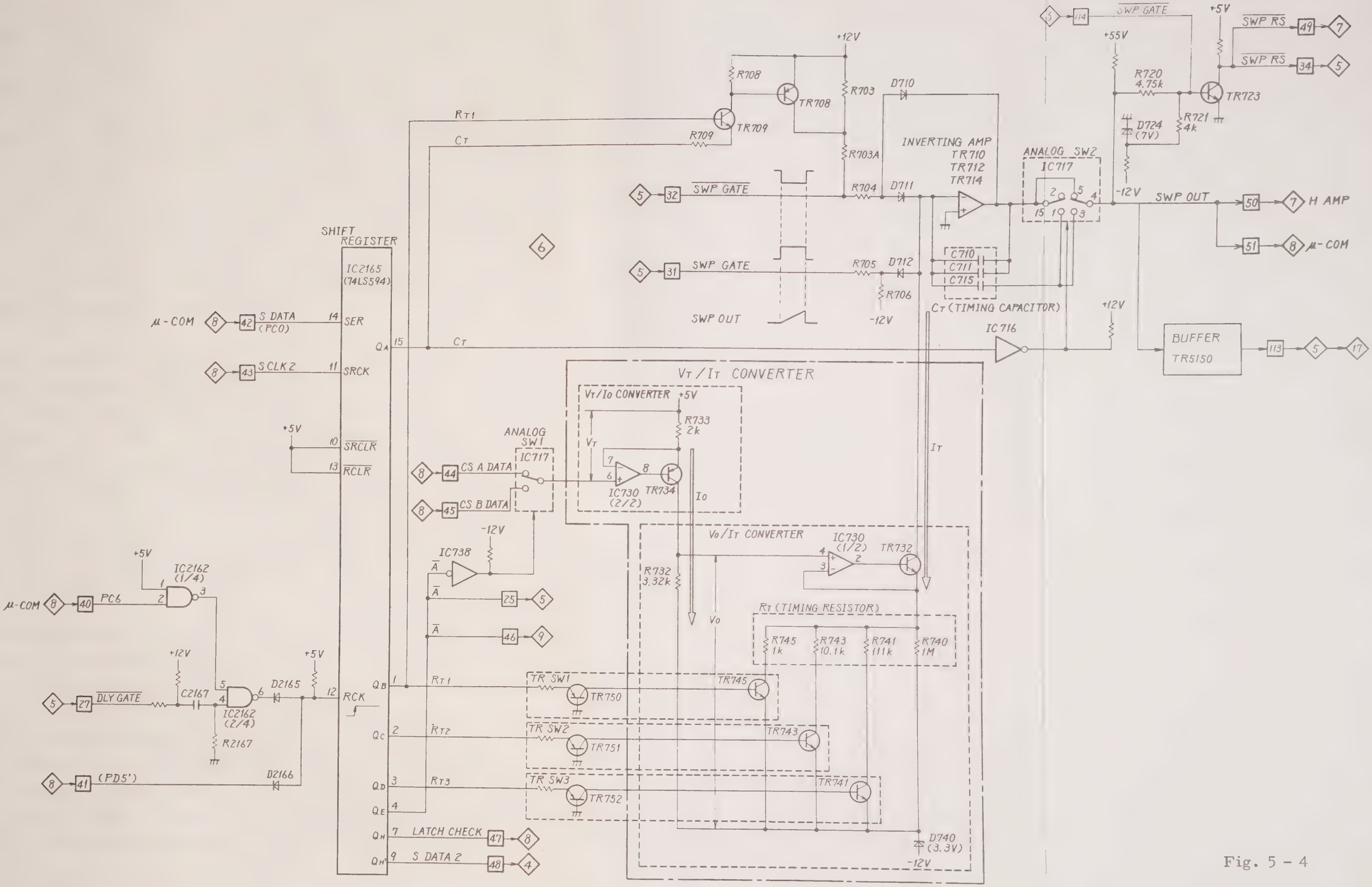
SHIFT REGISTER
IC2165 (74LS594)
μ-COM
S DATA (PC0)
SCLK2
SRCK
SRCLR
RCLR
+5V
IC2162 (1/4)
PC6
+12V
DLY GATE
C2167
IC2162 (2/4)
R2167
D2165
D2166
(PD5')
RCK
QA
QB
QC
QD
QE
QH
QH'
LATCH CHECK
S DATA 2
RT1
RT2
RT3
CT
R708
TR708
TR709
R709
R703
R703A
D710
INVERTING AMP
TR710
TR712
TR714
SWP GATE
R704
D711
R705
D712
R706
SWP OUT
-12V
ANALOG SW2
IC717
C710
C711
C715
CT (TIMING CAPACITOR)
IC716
+55V
R720 4.75k
R721 4k
D724 (7V)
TR723
SWP RS
BUFFER TR5150
H AMP
μ-COM
VT / IT CONVERTER
VT/Io CONVERTER
R733 2k
VT
IT
Io
ANALOG SW1
CS A DATA
CS B DATA
IC730 (2/2)
TR734
IC738
Vo/IT CONVERTER
IC730 (1/2)
TR732
R732 3.32k
Vo
RT (TIMING RESISTOR)
R745 1k
R743 10.1k
R741 111k
R740 1M
TR SW1
TR SW2
TR SW3
TR750
TR751
TR752
TR745
TR743
TR741
D740 (3.3V)

Fig. 5 - 4

5.6 H AMP (◇7◇, ◇9◇)

Fig. 5-5 is the detailed block diagram of this circuit. Normally the TR SW (1) circuit is not activated, and the SWP OUT signal from [50] is applied to the DIFF AMP(1) circuit via the AMP (1) circuit. In the X-Y mode, the $\overline{\text{X-Y}}$ signal from [52] goes low, so that TR811 turns off and TR812 turns on. Therefore, the TR SW (1) circuit is activated, and the X-SIG from [16] is applied to the DIFF AMP(1) circuit via the AMP(1) circuit. On the other hand, the H POS signal from [53] is set to the optimum DC voltage by H POS START RV807, and is applied to the DIFF AMP(1) circuit via the AMP(2) circuit.

The DIFF AMP(1) circuit is activated in the waveform display mode, and the DIFF AMP(2) circuit is activated in the dot display mode. When I_1 or I_2 flows, the DIFF AMP(1) circuit is activated. When I_3 flows, the DIFF AMP(2) circuit is activated. Either of I_1, I_2 or I_3 is always flowing. I_1 flows in the x1 mode, I_2 in the x10 mode, and I_3 in the dot display mode.

The selection of I_1, I_2 or I_3 is controlled by the $\overline{\text{X1}}$ signal from [54] and the DOT EN signal from [56].

The state of the $\overline{\text{X1}}$ signal is determined by DPDT switch (x10 MAG) S1605 in ◇9◇. One switching circuit (pins 4, 5, and 6) of S1605 controls the CURRENT SW(1) directly. The other switching circuit (pins 1, 2, and 3) informs the microcomputer of the setting state (x1 or x10) by changing the output voltage AN0 of D/A(2) RM1601. Pressing the [ALT] and [B] switches simultaneously results in the X-Y mode, and pin 4 of S1605 is grounded. Therefore, in the X-Y mode, even if the x10 MAG switch is set to the x10 side, the switch is forced to return to the x1 mode.

The microcomputer is informed of the states of the [ALT] and [B] switches microcomputer by the output voltage AN2 of D/A(1) RM1603. D841 and D842 are switching diodes, and change the current flow in the DIFF AMP(1) circuit according to the x1 or x10 mode. Both diodes turn off in the x1 mode, and on in the x10 mode. In the waveform display mode, the output of the DIFF AMP(1) circuit is applied to the DIFF AMP(3) circuit.
In the dot display mode, the output of the DIFF AMP(2) circuit is applied to the DIFF AMP(3) circuit.

The DIFF AMP(3) circuit employs a common-base circuit, and the low impedance input and the high impedance output are realized. The output of the DIF AMP(3) circuit is sent to the CURRENT LIMITER circuit consisting of the common-base DIFF AMP circuit (TR851 and TR852) and the diodes (D873 and D874). This CURRENT LIMITER prevents the H OUTPUT AMP circuit from being driven up to a saturation region.
The output signal current of TR851 is amplified by emitter follower stage TR881 and common-emitter stage TR885. The amplified output is fed back to the input through R857, R855, C857, and C855. The feedback amount at high frequency is adjusted by CV859 to optimize the linearity at the 5 ns/div sweep.

TR871 is an active load of TR885. The AC component is applied to the base of TR871 through C883 so that the supply current increases when the output voltage changes to the positive at a high speed.
The operation of the circuits following TR852 is identical with the above operation except for signal polarities.

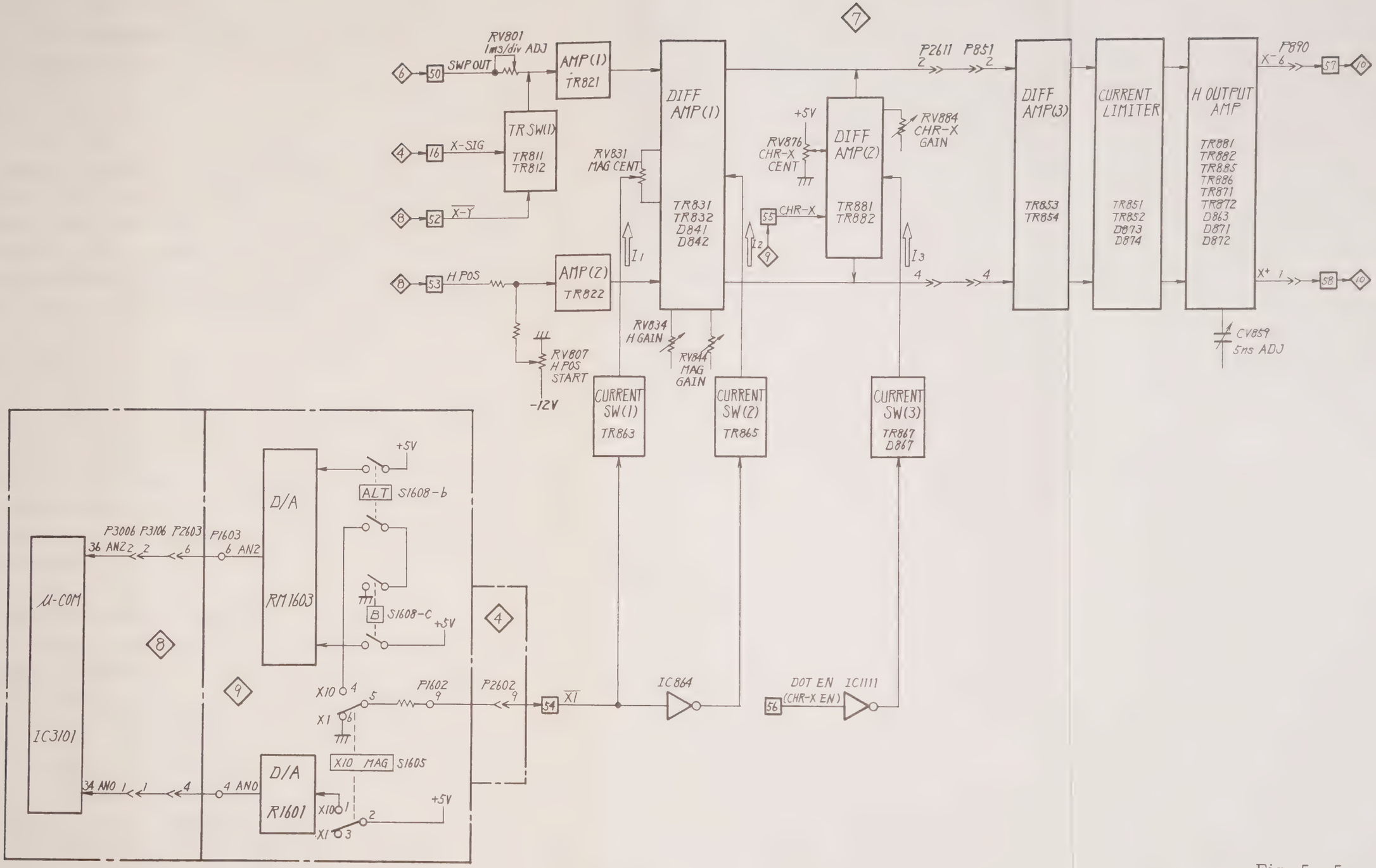
7
RV801 1ms/div ADJ
SWP OUT
AMP(1) TR821
DIFF AMP(1) TR831 TR832 D841 D842
P2611 P851
DIFF AMP(3) TR853 TR854
CURRENT LIMITER TR851 TR852 D873 D874
H OUTPUT AMP TR881 TR882 TR885 TR886 TR871 TR872 D863 D871 D872
P890
X- 6
X+ 1
CV859 5ms ADJ
TR SW(1) TR811 TR812
X-SIG
X-Y
RV831 MAG CENT
+5V
RV876 CHR-X CENT
DIFF AMP(2) TR881 TR882
RV884 CHR-X GAIN
CHR-X
I1
I2
I3
H POS
AMP(2) TR822
RV807 H POS START
-12V
RV834 H GAIN
RV844 MAG GAIN
CURRENT SW(1) TR863
CURRENT SW(2) TR865
CURRENT SW(3) TR867 D867
μ-COM
IC3101
P3006 P3106 P2603
36 ANZ
P1603
6 ANZ
D/A RM1603
ALT S1608-b
B S1608-C
+5V
X10
X1
P1602
P2602
XI
IC864
DOT EN IC1111
(CHR-X EN)
34 ANO
4 ANO
D/A R1601
X10 MAG S1605

Fig. 5 - 5

5.7 UNBLANKING & Z-AXIS AMP (◇7◇ , ◇8◇ , ◇9◇ , ◇10◇)

Description on the UNBLANKING circuit and the Z-AXIS AMP circuit follows. Refer to Figs. 5-6 and 5-7.

UNBLANKING circuit

The UNBLANKING circuit consists of two functional blocks. One consists of IC1101 1/3, IC1101 3/3 and D1113 and controls a waveform display, and the other consists of IC1121 3/4 and D1114 and controls the readout character display. The intensity of the displayed waveform is controlled by the INTEN control and that of the readout characters by the READOUT INTEN control.
The waveform display and the readout display (the dot display) are performed by the time division.
Like the X-axis circuit and the Y-axis circuit, the UNBLANKING circuit in the Z-axis circuit is switched according to the time division. In other words, either of the two functional blocks (the $\overline{\text{UNBL}}$ and $\overline{\text{CHR Z}}$ signals) of the UNBLANKING circuit is selected by the DOT EN signal or the $\overline{\text{DOT EN}}$ signal according to the kind of the requested display, the waveform or the dots (characters of cursors).

To effect or not blanking of the waveform and the dots (characters or cursors) is controlled by the $\overline{\text{UNBL}}$ signal and the $\overline{\text{CHR Z}}$ signal, respectively. When the waveform is displayed, the $\overline{\text{UNBL}}$ signal is low, and the $\overline{\text{CHR Z}}$ signal is high. Since the emitter voltage of TR901 is always zero volts, D1113 is on, and D1114 is off. When the dots (characters or cursors) are displayed, the $\overline{\text{UNBL}}$ signal is high, and the $\overline{\text{CHR Z}}$ is low. Therefore, D1113 is off, and D1114 is on.
When the sweep begins and the $\overline{\text{SWP GATE}}$ signal from [33] goes low or when the $\overline{\text{X-Y}}$ signal from [60] goes low in the X-Y mode, the $\overline{\text{UNBL}}$ signal fed out from pin 8 of IC1101 (3/3) goes low, resulting in the waveform display state.

When the CHR EN goes high to display characters, or the $\overline{\text{CUR EN}}$ signal low from 59 goes L to display cursors, the DOT EN signal is fed out from pin 11 of IC1121 (4/4), and resulting in the dot display state.
The waveform becomes the blanking state ($\overline{\text{UNBL}}$=H) in the following cases (1) to (4).

(1) When the sweep finishes, and the $\overline{\text{SWP RS}}$ signal from 49 goes low
(2) While the microcomputer are operating
    In this case, D1101 or D1105 turns on.
(3) When the switching part needs to be blanked
    In this case, D1102 turns on.
(4) Dot display
    In this case, D1103 and D1104 turn on.

The H AMP is changed by the DOT EN signal (corresponding to the the CHR-X EN signal) fed out from 56 , and the V AMP is changed by the $\overline{\text{DOT EN}}$ signal (corresponding to the $\overline{\text{CHR-Y EN}}$ signal) fed out from 61 .

Z-AXIS AMP

This circuit consists of the current limiter (TR901 and D901) and the feedback AMP (TR906, TR910, and TR912). There are two input channels to this AMP. One is the waveform display channel of D1113, and the other is the dot display channel of D1114.
These channels are selected by the DOT EN signal fed out from pin 11 of IC1121 (4/4).
In either case, the current from TR901 emitter increases, the intensity of the CRT increases.
The change of the input current applied to TR901 emitter is not transmitted to the collector, but the change is not transmitted to TR906 by D901. Therefore, the output voltage of the Z.AXIS

AMP is controlled so that it is not lower than approximately 5V. When the current of TR901 (from the emitter) increases, the current across D901 increases. Therefore, the base voltage of TR906 decreases. As a result, the base voltage of TR912 decreases, and the output voltage of the Z-AXIS AMP becomes more positive. This output is connected with the electrode G1 for the beam control of the CRT. So when the output voltage of the Z.

AXIS AMP becomes further positive, the intensity increases accordingly.

IC4001 is a selector and switches the circuit in the STORAGE mode and in the RT0 mode. In the RT0 mode, the STORAGE signal entered at terminal S goes low and the terminal at the side A is selected. In other words, 1Y, 2Y and 4Y are connected to 1A, 2A and 4A, respectively. In the STORAGE mode, the STORAGE signal entered at terminal S goes high, and the terminal at the side B is connected. The STR SWP signal is the control signal which illuminates the CRT screen when displaying the stored waveform . The signal entered at ⑦ is the control signal which illuminates the CRt screen when displaying the stored characters.

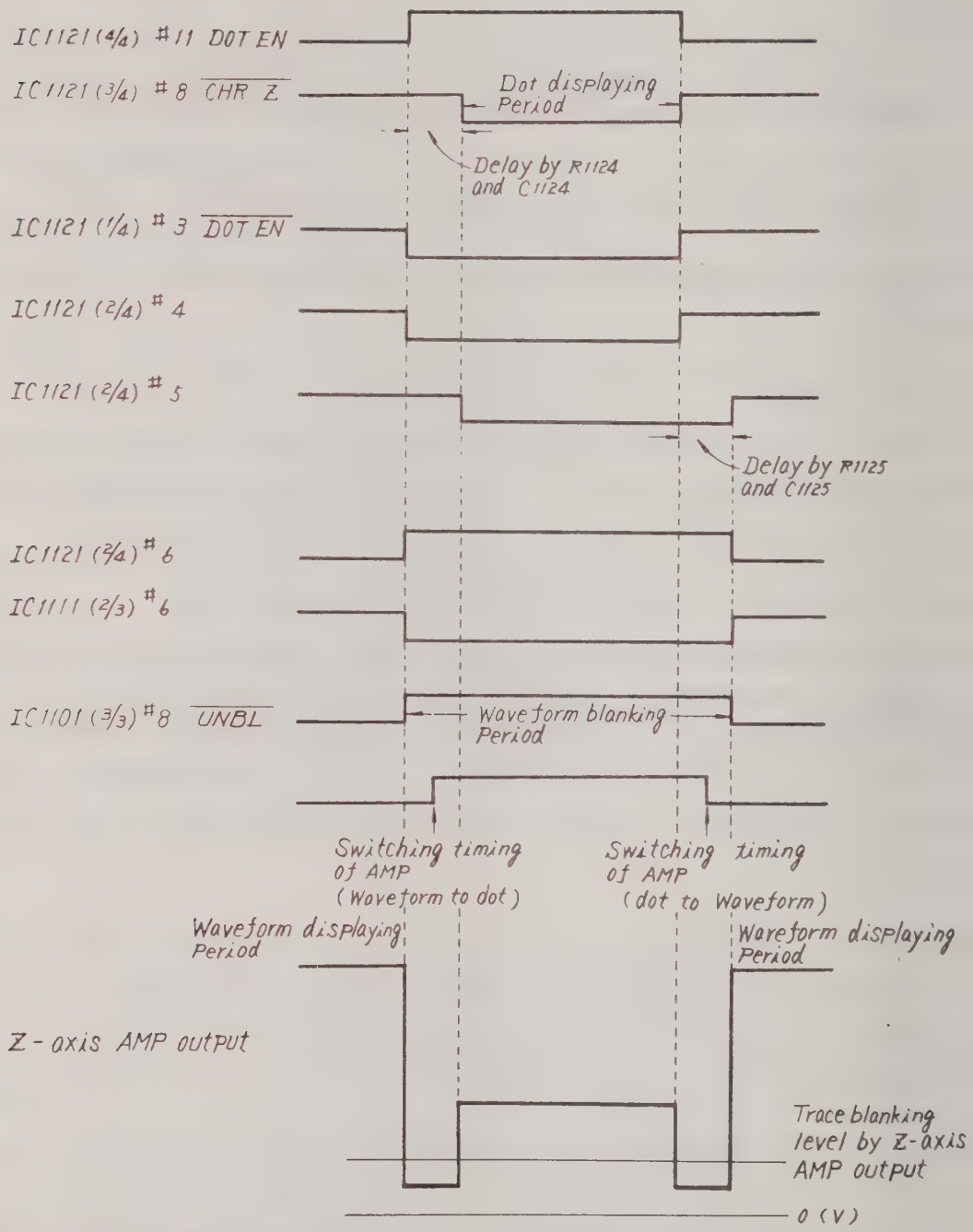

Note 1: The above waveforms are synchronous each other.

Note 2: The unblanking waveform in each sweep and the above waveforms are asynchronous.

Fig. 5-6

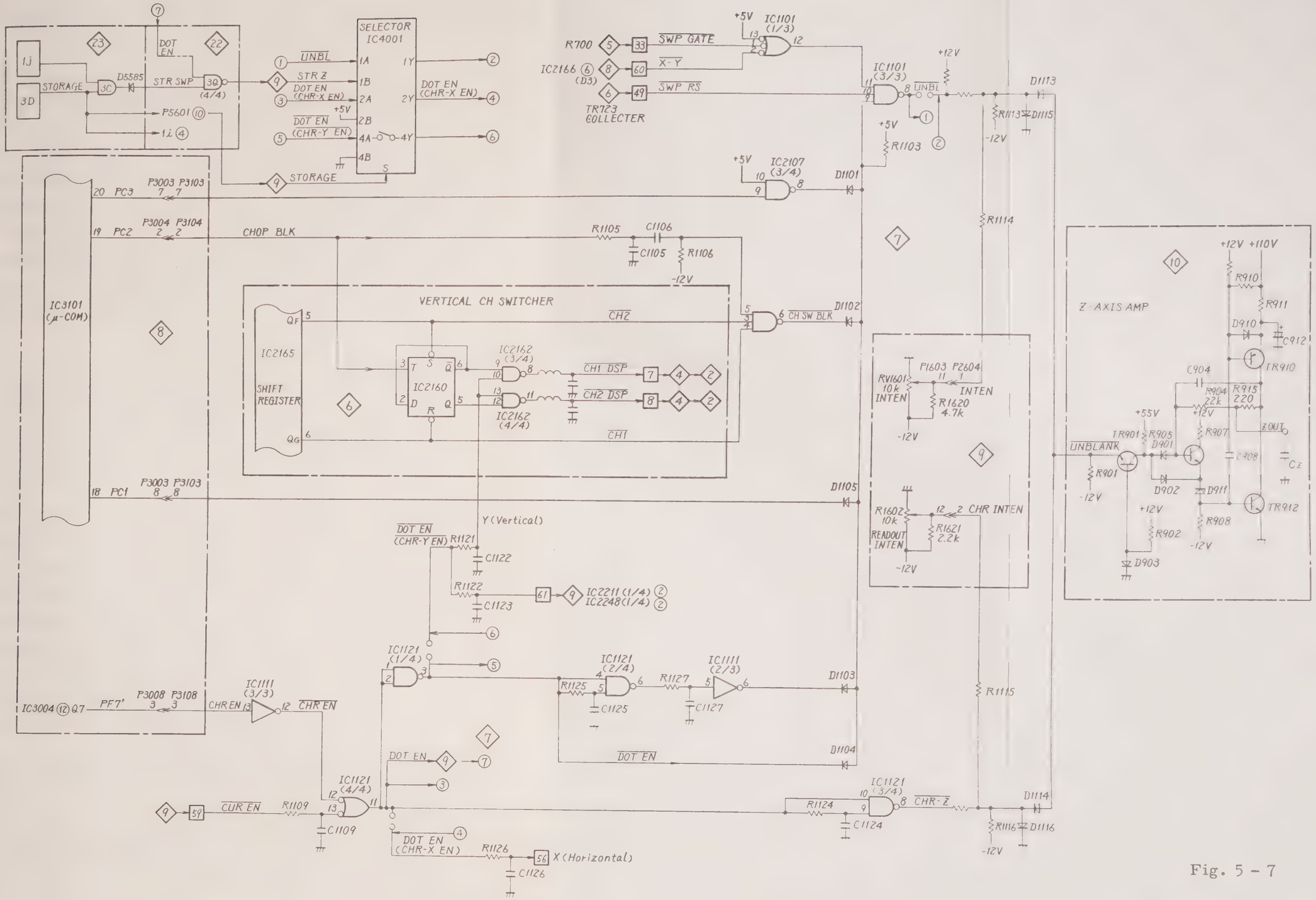
SELECTOR IC4001
UNBL
STR Z
DOT EN (CHR-X EN)
DOT EN (CHR-Y EN)
STORAGE
STR SWP
DOT EN
D5585
P5601
SWP GATE
X-Y
SWP RS
TR723 COLLECTER
IC2166 (D3)
IC1101 (1/3)
IC1101 (3/3)
IC2107 (3/4)
D1101
D1113
D1115
R1113
R1103
R1114
P3003 P3103
P3004 P3104
PC3
PC2
CHOP BLK
R1105
C1106
C1105
R1106
IC3101 (μ-COM)
VERTICAL CH SWITCHER
IC2165
SHIFT REGISTER
IC2160
IC2162 (3/4)
IC2162 (4/4)
CH2
CH1
CH1 DSP
CH2 DSP
CH SW BLK
D1102
D1105
D1104
D1103
Y (Vertical)
R1121
C1122
R1122
C1123
IC2211 (1/4)
IC2248 (1/4)
IC1121 (1/4)
IC1121 (2/4)
IC1121 (3/4)
IC1121 (4/4)
IC1111 (3/3)
IC1111 (2/3)
R1125
C1125
R1127
C1127
IC3004 Q7
PF7'
CHR EN
CUR EN
R1109
C1109
DOT EN (CHR-X EN)
R1126
C1126
X (Horizontal)
R1124
C1124
D1114
D1116
R1116
R1115
CHR-Z
RV1601 10k INTEN
R1620 4.7k
INTEN
P1603 P2604
R1602 10k READOUT INTEN
R1621 2.2k
CHR INTEN
Z-AXIS AMP
+12V +110V
R910
R911
D910
C912
TR910
C904
R904 22k
R915 220
R907
ZOUT
+55V
TR901
R905
D901
UNBLANK
R901
D902
D911
TR912
R908
R902
D903
C908
Cz

Fig. 5 - 7

5.8 VERTICAL CH SWITCHER (◇6◇)

Refer to Fig. 5-6 and Table 5-2.
The displayed channel is determined by the output signals $\overline{\text{CH1 DSP}}$ and $\overline{\text{CH2 DSP}}$. The state of these output signals are determined by the $\overline{\text{CH1}}$, the $\overline{\text{CH2}}$, and the $\overline{\text{DOT EN}}$ signals. The $\overline{\text{CH SW BLK}}$ signal for blanking the switching portion of the channel is generated from the CH1 and the CH2 signals. The clock pulse CHOP BLK of 500 kHz fed out from the microcomputer is constantly fed to terminal T of toggle flip-flop IC2160. The state of the $\overline{\text{CH1}}$ and the $\overline{\text{CH2}}$ signals fed out from Q_F and Q_G of SHIFT REGISTER IC2165 are determined by the V.MODE and the TIME/DIV switches.

Table 5-2 shows the relationship between "The Setting positions of the V MODE switch and the setting values of the TIME/DIV switch" and "The state of the $\overline{\text{CH1}}$, the $\overline{\text{CH2}}$, the $\overline{\text{CH1 DSP}}$, and the $\overline{\text{CH2 DSP}}$". Further, the supplemental explanation follows.

(1) When the V. MODE switch is set to CH1, the CH1 signal is displayed. Since the $\overline{\text{CH1}}$ signal is low, and the $\overline{\text{CH2}}$ signal is high, IC2160 is in the reset state, and high and low are fed out from Q and $\overline{Q}$, respectively. (In this case, a clock pulse from T is not valid.) On the other hand, when characters are not displayed, the $\overline{\text{DOT EN}}$ signal fed to pins 10 and 13 of logic circuit IC2162 (3/4, 4/4) is high. Therefore, the $\overline{\text{CH1 DSP}}$ signal is low, the $\overline{\text{CH2 DSP}}$ is high, and the CH1 signal is displayed.

(2) When the V. MODE switch is set to CH2, the CH2 signal is displayed.
Since the $\overline{\text{CH1}}$ signal is high, and the $\overline{\text{CH2}}$ signal is low, IC 2160 is in the reset state.

(3) When the V. MODE switch is set to CHOP, the CH1 and the CH2 signals are displayed alternately at a 250 kHz cycle. In this case, the $\overline{CH1}$ and the $\overline{CH2}$ signals are high, and IC2160 operates as a toggle flip-flop.
Therefore, the outputs of $\overline{Q}$ and Q are inverted during the rising edge of a 500 kHz clock pulse fed to T.

(4) When the V.MODE switch is set to DUAL,
a. When the TIME/DIV switch is set to 2 ms/DIV or slower, the circuit operation is the same as that of item (3).
b. When the TIME/DIV switch is set to 1 ms/DIV or faster, the polarities of the $\overline{CH1}$ and the $\overline{CH2}$ signals are opposite, and they are inverted every approximately 20 ms. Therefore, the $\overline{CH1}$ or the $\overline{CH2}$ signals are displayed alternately every approximately 20 ms.

Table 5-2

V MODE	TIME/DIV	$\overline{CH1}$	$\overline{CH2}$	Q	$\overline{Q}$	$\overline{CH1\ DSP}$	$\overline{CH2\ DSP}$	Displayed CH
CH1	----	L	H	H	L	L	H	CH1
CH2	----	H	L	L	H	H	L	CH2
CHOP	----	H	H	H↔L	L↔H	L↔H	H↔L	CH1↔CH2 (250 kHz)
DUAL	≧ 2 ms	H	H	H↔L	L↔H	L↔H	H↔L	CH1↔CH2 (250 kHz)
	≦ 1 ms	H↔L	L↔H	H↔L	L↔H	L↔H	H↔L	CH1↔CH2 (20 ms)

5.9 μ-COM, CHR GEN & FRONT PANEL (◇8◇, ◇9◇)

Outline

The description on the microcomputer, its peripheral circuits, the control circuit of information on characters and cursors, and the circuit which inputs information on the panel switch setting into the microcomputer follows. Refer to Fig. 5-8.

Most of information on the switches on the panel is acquired by the microcomputer, which controls the waveform display and the readout to obtain the optimum state.
Information on the panel switch setting is acquired as an analog signal from ports AN0 to AN7. The analog signal is converted into a digital signal by the A/D converter in the microcomputer. The processing programs are stored in ROM IC3001. The 10 bits digital data is converted into analog data. The converted analog data is output as a continuously variable signal among the control signals fed out from the microcomputer through ANALOG SWITCH IC2130. A digital control signal is fed out from port PC0 as an S-DATA (serial data), sent to the shift registers, and fed out as bit information.
The frequency of measured signals are counted by the counters outside the microcomputer, and fed to the microcomputer from port PC5 and used to determine the sweep time automatically.

While the change of the setting state is being fed out from the microcomputer, the waveform display is blanked so as not to appear the disturbance of the waveform. For this purpose, the control signal is sent to the Z-CONT circuit from the output port PC3.
The character display data is fed out from IC3005 and IC3004, converted into analog data by RM2232 and RM2231, and fed out as

analog voltages CHR-X and CHR-Y. The A/B ALT SEP BIAS voltage is fed out from the same terminal as that of CHR-Y. The switching of characters, cursor patterns, and A/B ALT SEP BIAS outputs is performed by ANALOG SWITCH IC2220. The machine clock of this microcomputer is 12 MHz, and oscillated by ceramic oscillator X3101. While the power is on, terminal RESET is maintained to be low by the $\overline{\text{RESET}}$ circuit until the voltage for the digital circuit power supply becomes stable.

Read of status information

Information concerning the setting state of switches on the panel is fed to ports AN0 to AN7 of the microcomputer as an analog signal.
When the variable control items related to the X axis and the VARIABLE SELECTION items for selecting cursors are selected, the microcomputer recongnizes the DC output voltage of endless variable resistor RV2400 (VARIABLES) as the control signal related to the selected item, and processes the output voltage. The microcomputer converts an analog signal into a digital signal by the built-in A/D converter, and performs various processes using the signal.
Terminals AV_{DD} and VA_{REF} are input terminals of the supply voltage and the reference voltage of the A/D converter, respectively.

Read of programs and transmission of data

Address information is sent to LATCH IC3003 from ports PD7 to PD0 of the microcomputer. At this time, terminal LE of IC3003 is high (latch enable), so that IC3003 latches this address information.

Since terminal $\overline{OE}$ of IC3003 is always low, the information on the latched address is transferred to ROM IC3001 and RAM IC3210 immediately. The high-order bits of address information is sent to ROM IC3001 and RAM IC3210 from ports PF5 to PF0 of the microcomputer. At this time, $\overline{CE}$ (chip enable terminal) of ROM IC3001 is low by the signals at PF7.
When $\overline{RD}$ of the microcomputer goes low, $\overline{OE}$ of ROM IC goes low by the operation of the LATCH CONTROL circuit. Therefore, the microcomputer reads the above designated address data (program) from ports PD7 to PD0 through the bus.
Like ROM, the $\overline{CE}$ terminal of RAM IC3210 goes high by the signal from PF7 and PF6, and data is read and written.

After the microcomputer performs the processing according to the read program, the processed data is output from each port. Data of ports PD7 to PD0 is sent to F.F IC3005 and data of ports PF7 to PF0 is sent to F.F IC3004. The former is transferred to Q7 to Q0 of IC3005 and the latter to Q7 to Q0 of IC3004 during the rising edge of a clock pulse sent from the LATCH CONT.
At this time, $\overline{OE}$ of IC3001 goes high, D7 to D0 become a high impedance state, and are not related to the data transfer.

(Data communication between MPU's)

There are two microcomputers used: one for the real-time oscilloscope and the other for the storage oscilloscope. The two microcomputers communicate each otehr. For this communication, refer to the DIGITAL MPU ( ).

Output of the analog control signal

The 8 bits output of PA7 to PA0 of the microcomputer and the 2 bits output of Q7 and Q6 of IC3005 are added. The resultant 10 bits data is converted into the analog voltage by D/A 1 (RM2120), and fed to ANALOG SWITCH IC2130. D/A 1 has a resolving power of 1000, and feeds out the analog voltage between 0 and 5 V. ANALOG SWITCH IC2220 is constantly switched in the fixed order by a 3 bits control signal from PB2 to PB0. The output voltage of the ANALOG SWITCH is maintained at the fixed voltage by a sample hold capacitor of each line. The INH signal in the high state is fed out from PB4 when the switch is changed to perform a "break before make" operation.

Transmission of serial data

A digital control signal is fed out from port PC0 as a serial data (S DATA) and fed out from SHIFT REGISTER's IC2166, IC2165 (◇6◇), IC1601 and IC1602 as a parallel information.
There are three kinds of S DATA: A, B and C.
"A" is 16 bits and includes a 9 bits signal to light the LED on the front panel and a 1 bit control signal (Ci SEL A) to switch an input signal to input inport PC5 of the microcomputer.
"B" is the 8 bits information data related to the switching of the TIME/DIV setting value of the waveform sweep and of the DISPLAY mode.
Shift registers IC2165, IC1601 and IC1602 are connected in series, and the 24 bits S DATA ("A" data + "B" data) is acquired from data input terminal SER of IC2165. Then "A" data is allocated to IC1602 and B data to IC1602. Data of each shift register is acquired by the clock pulse SCLK2. To change a digital control signal, a 24 bits S DATA including the bit to be changed is sent only once. The 500 kHz pulse is fed out constantly from PC2. This pulse is controlled by the output signal PC6 and fed to GATE2 IC2107.

When PC6 is high, SCLK2 is fed out from GATE2 IC2107. PC6 is also used as a latch enable signal of IC2165. Refer to ◇6◇ for the latch operation.

"C" data includes information for determining the cycle period and of X-Y mode and 2 bits control signal (Ci SEL B, Ci SEL C) for the switching of IC2161. C data is fed to IC2166, and shifted by the shift clock pulse SCLK1. When any bit of the digital control signal is needed to change, an 8 bits S DATA including the changed bit is sent once. When all 8 bits data is shifted, the SCLK1 signal stops. The SCLK1 signal as well as the SCLK2 signal is a 500 kHz pulse, and its timing is controlled by the PC3 output.

The 8 bits B data is output simultaneously by the latch operation of IC2165 when the shift finishes, the waveform sweep finishes, and the hold-off period begins. Therefore, the switching of B data does not effect the display on the CRT.
On the other hand, the switching of C data is performed by the shift of an 8 bits S DATA. Therefore, when the switching is performed during the sweep period, the normal display is not obtained. When the PC3 output is high, the PC3 signal (SCLK1) is sent to the Z circuit to blank the display.

Acquirement of a control signal

The microcomputer acquires external information from PC5 through analog switch IC2161. When the power switch is turned to on, the microcomputer reads the DC voltage of terminals D7 to D5 of IC2161, discriminates the type of this oscilloscope, and selects the applicable program memorized in the ROM.
Then, the microcomputer reads the DLY ADJUST and SWP GATE signals from D3 and D4, and executes the automatic calibration of the delay time. The automatic calibration is executed by

converging the DLY RAMP signal by the TEST SIG fed from PC4, the analog output DLY PRESET, and the loop circuit consisting of the feedback signals DLY ADJ and SWP GATE.
Normally the switching control signals Ci SEL B and Ci SEL C of IC2161 are low. When the Ci SEL A goes low or high, D_0 or D_1 of the analog switch is connected, and the trigger pulse of the measured pulse is counted to determine the cycle time.
Moreover, the $\overline{\text{H/O END}}$ and the LATCH CHECK signals are fed to the microcomputer to transmit the external state.

Transmission of information on characters and cursor patterns

Data of character information is output from IC3004 and IC3005. In other words, 3 bits data related to the Y component of information representing one character is output on PF2' to PF0', 3 bits data related to the X component of information representing one character is output on PF6' to PF4', and 5 bits data related to the X position of each character is output on PD4' to PD0'.
The data on the Y component of a character is converted into an analog signal by D/A converter D/A2. The converted signal is added with the DC voltage CUR-POS which means the information on the vertical direction of the character or the cursor position, and then fed to analog switch IC2220. The CUR-POS is fed from analog switch IC2130.
The 3-bit data on the X component of one character and the 5-bit data on the position of the X direction of each character are added, and the resultant 8-bit data is converted into an analog signal by D/A converter D/A3.

The dots for cursor generated by the CURSOR DOT GENERATOR are converted into analog signals by D/A converter D/A4 and fed to IC2220. The operation of the cursor pattern generator circuit will be discussed later.

The DC voltage of 1 V which determines the center position in the Y direction of a waveform in the A sweep mode is applied to terminal X2 in the A sweep mode is applied to terminal X2 of IC2220. To terminal X3 of IC2220, the voltage A/B ALT SET BIAS which gives the center position in the Y direction of the B sweep waveform in the A/B ALT mode is applied. The switching operation of IC2220 is performed by the control signals $\overline{A}$, CURSOR and $\overline{\text{DOT EN}}$. For details, refer to Table 5-3.

As shown in this table, the display direction (X or Y) of cursor patterns is determined by switching IC2220. The vertical or horizontal movement of cursors is determined by the CUR-POS signal.

Next, the description on the cursor pattern generator circuit follows.

When the cursor measurement is selected by the panel switch operation, the CUR RESET output of the microcomputer goes low, and pin 10 of CURSOR DOT GENERATOR IC2248 goes high. Then, the oscillation starts. The clock pulse of the oscillation output is fed to $\overline{\text{CLK}}$ of COUNTER IC2212. The output of the COUNTER is converted into an analog signal by D/A converter D/A4 and fed out as the cursor pattern signal. Breaks are produced on a cursor pattern, because pin 4 of the D/A4 is grounded.

When the counter output D6 goes high, pin 10 of IC2248 goes low, and the oscillation stops. At the same time, the CUR END signal in a high level is sent to the microcomputer. The microcomputer receives the CUR END signal and sends the CUR RESET signal in the high state to reset the counter.

When the COUNTER is reset, D6 goes low, but pin 5 of IC2211 is high. Consequently, pin 10 of IC2248 is low, and the CURSOR DOT GENERATOR continues to stop the oscillation. When the CUR RESET goes low and the reset is released, the oscillation starts and the above operation is repeated.

Table 5-3

Kinds of DISPLAY		Control signal			Control signal of switch input		Connection of switches	Output signal of X terminal	Output signal of Y terminal
		$\overline{\text{DOT EN}}$	CUR SEL	$\overline{\text{A}}$	B	A			
Waveform display	A sweep	H	*	L	H	L	$X_2 \rightarrow X$ $Y_2 \rightarrow Y$	1 V DC	No
	A/B ALT	H	*	H	H	H	$X_3 \rightarrow X$ $Y_3 \rightarrow Y$	A/B ALT SEP BIAS	No
Character display		L	L	*	L	L	$X_0 \rightarrow X$ $Y_0 \rightarrow Y$	Y component of a character (added to the CUR POS)	X component of a character
Horizontal cursor display		L	L	*	L	L	$X_0 \rightarrow X$ $Y_0 \rightarrow Y$	CUR POS	Cursor pattern
Vertical cursor display		L	H	*	L	H	$X_1 \rightarrow X$ $Y_1 \rightarrow Y$	Cursor pattern	CUR POS

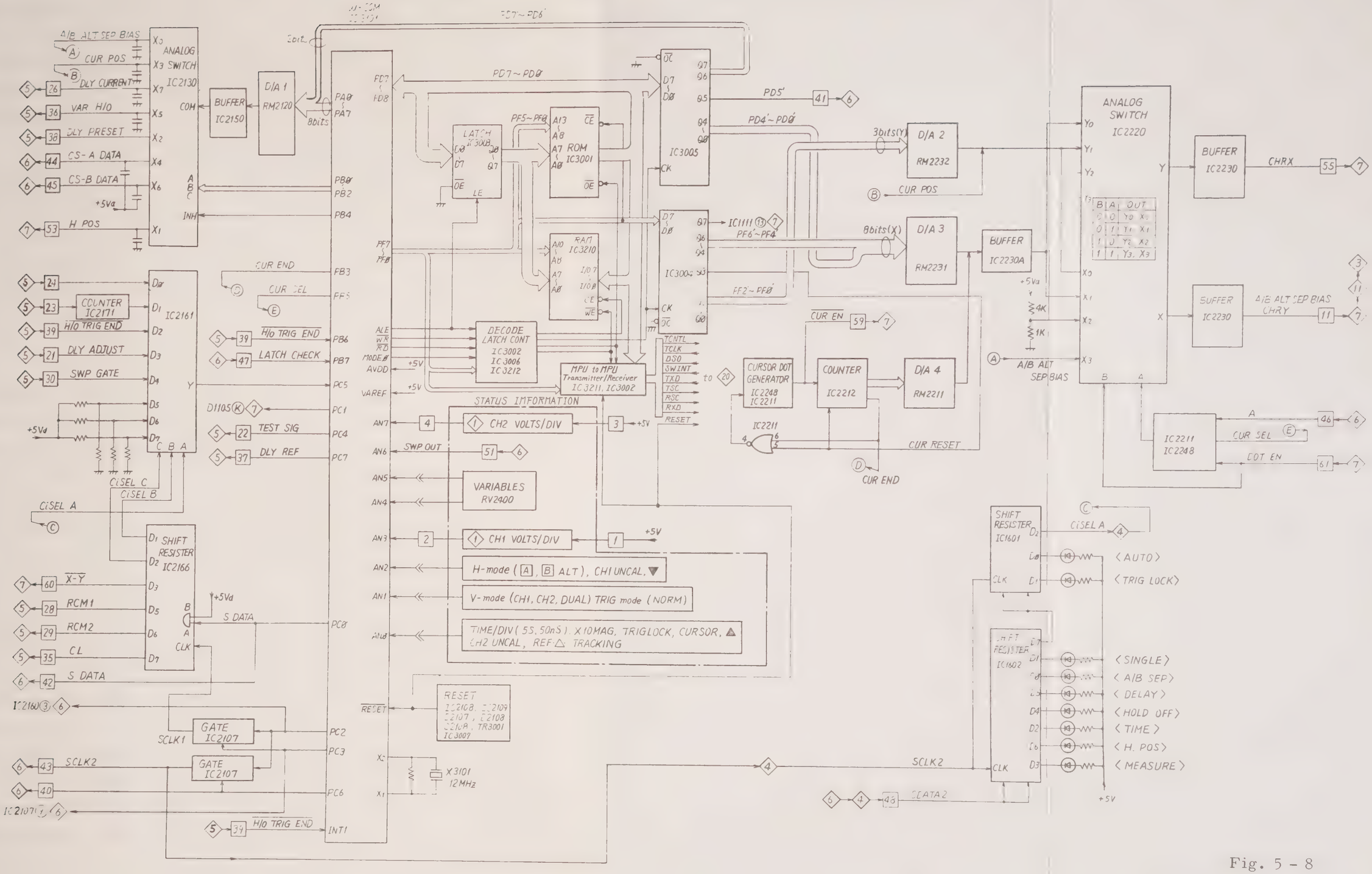
ANALOG SWITCH IC2130
BUFFER IC2150
D/A 1 RM2120
LATCH IC3008
ROM IC3001
RAM IC3210
IC3005
IC3004
D/A 2 RM2232
D/A 3 RM2231
BUFFER IC2230A
ANALOG SWITCH IC2220
BUFFER IC2230
BUFFER IC2230
IC2161
COUNTER IC2171
DECODE LATCH CONT IC3002 IC3006 IC3212
MPU to MPU Transmitter/Receiver IC3211, IC3002
CURSOR DOT GENERATOR IC2248 IC2211
COUNTER IC2212
D/A 4 RM2211
IC2211 IC2248
STATUS INFORMATION
CH2 VOLTS/DIV
VARIABLES RV2400
CH1 VOLTS/DIV
H-mode (A, B ALT), CH1 UNCAL,
V-mode (CH1, CH2, DUAL) TRIG mode (NORM)
TIME/DIV (5S, 50nS), X10MAG, TRIGLOCK, CURSOR, CH2 UNCAL, REF△ TRACKING
SHIFT RESISTER IC2166
SHIFT RESISTER IC1601
SHIFT RESISTER IC1602
GATE IC2107
RESET
X3101 12MHz
<AUTO>
<TRIG LOCK>
<SINGLE>
<A/B SEP>
<DELAY>
<HOLD OFF>
<TIME>
<H. POS>
<MEASURE>

Fig. 5 - 8

5.10 HV, CRT (⟨10⟩)

The detailed block diagram of this circuit is shown in Fig. 5-9. This circuit consists of the following five blocks.

(1) High voltage generation circuit and the voltage regulator circuit
(VCO, PULSE AMP, SWITCH, FLYBACK TRANSFORMER & RECTIFIER, ERROR DETECTOR)

(2) Bias circuit for Grid No.1
(CHOPPER 1, DC RESTORER)

(3) Focus control circuit
(VOLTAGE DIVIDER, CHOPPER 2, DC RESTORER 2, focus and intensity control circuit)

(4) CRT

(5) Others
(TRACE ROTATION, ASTIG)

The circuit operations of the above blocks (1), (2), and (3) are described below. For details, refer to the schematic diagram HV, Z, CRT ⟨10⟩ .

(1) High voltage generation circuit and the voltage regulator circuit

(a) Voltage controlled oscillator (VCO)
The VCO supplies a positive pulse voltage from the collector of TR1002 by turning on and off TR1001 and TR1002 alternately. When the power switch is turned on, TR1001 becomes on, and C1004 starts to be charged through R1004. The charging voltage of C1004 rises the emitter voltage of TR1002 and then TR1002 becomes on. C1004 discharges immediately after TR1002 becomes on, the emitter voltage of TR1001 drops, and TR1001 becomes off.

Then, C1004 is charged in the opposite direction through R1003, the emitter voltage of TR1001 rises, and TR1001 becomes on. These operations are repeated to continue generating the positive pulse. The period of the pulse is determined by the on/off periods of TR1001 and TR1002. In other words, the period is determined by the time constants of R1003 and C1004, and R1004 and C1004 and the charging current. If the charging current is small, the pulse frequency becomes low, and the pulse width of the positive portion of the output pulse increases. Then, the energy in the primary coil of the FLYBACK TRANSFORMER (FBT) increases and the output voltage of the secondary coil increases.

(b) PULSE AMP

The positive pulse is amplified by PULSE AMP TR1010, and is supplied to the base of switching transistor TR1013 through pulse transformer T1013. The PULSE AMP amplifies the VCO output up to the level enough to drive the switching transistor and shapes the drive current waveform to minimize the cut-off loss of the switching transistor. The PULSE AMP also functions as a buffer to prevent the load variation at the output stage of the switching transistor from affecting the VCO.

(c) SWITCH

When the positive pulse is supplied to the base of switching transistor T1013, T1013 becomes on, the current which increases linearly flows into the primary coil of the FBT, and the energy is stored.

Even if the switching transistor becomes off, the current continues to flow in the same direction by the inductance inertia of the coil, and C1013 is charged.

The charging current decreases gradually, and the charging voltage becomes maximum when the charging current becomes zero. Then, a discharging current flows in the opposite direction through the coil. When the voltage on C1013 becomes zero, the discharging current becomes maximum.

D1013 becomes conductive by the counter electromotive force of the coil, and the current flows from the coil in the charging direction.

The current decreases gradually, and becomes zero again. Later, TR1013 becomes on by the next positive pulse, and the same circuit operation is repeated.

Thus, the alternate current flows into the coil and the voltage is generated at the secondary circuit.

(d) Voltage regulator circuit

This circuit detects a change in the cathode voltage of the CRT, and feeds back the change to the VCO to control the oscillation frequency so that the output voltage is regulated.

A small current flows from the base of TR1023 to the cathode line (-1650 V line in the schematic diagram) through R1035. The current is the sum of the base current of TR1023, the current through R1024, and the base current of TR1022.

For example, when the cathode voltage changes in the positive direction, the current flowing across R1035 decreases. Since the base current of TR1023 and the current across R1024 are constant, the base current of TR1022 decreases.

Then, the emitter current of TR1022 decreases, and the charging current of C1004 in the VCO also decreases.
Consequently, the oscillation frequency of the VCO becomes low as described in (a), and the cathode voltage of the CRT changes in the negative direction. The secondary output voltage of the FBT is thus regulated by the feed-back loop.

(e) FTB

A half-wave rectified output of 15 kV is supplied from the secondary side of the FBT, and is applied to the electrode P3 of the CRT. A half-wave rectified signal of -1650 V is supplied to the cathode.
The heater voltage is connected to the cathode line and is the same electric potential with the cathode voltage.
A -350 V pulse voltage is obtained to produce the G1 bias voltage and the focus bias voltage.

(2) Bias circuit for Grid No.1 (CHOPPER 1, DC RESTORER 1)

This circuit generates a voltage applied to G1 of the CRT. A pulse voltage is supplied from T1013 via C1040 and R1040. The positive peak voltage is limited to the CRT bias voltage (E_A) by D1040 and the negative peak voltage is limited to the output voltage (E_Z) of the Z-AXIS AMP. Then, the chopped waveform having the envelope of the difference between E_A and E_Z appears at point (P) (See the block diagram).

The chopped waveform is supplied to D1043 via C1041, and the positive peak voltage is clamped to the -1650 V cathode voltage. The negative peak voltage is rectified by D1042 and D1043 to produce a negative DC voltage. As a result, the signal whose DC level is shifted to the voltage lower than the cathode voltage is supplied to G1. (The waveform of the signal is the same as that of the Z-AXIS AMP output.) The high-frequency component of E_Z is directly supplied to G1 via C1043.

(3) Focus control circuit

This circuit produces a voltage applied to P1 (focus) of the CRT. The focus voltage is produced with the reference to E_{FR} (-1165 V) obtained by dividing the cathode voltage (-1650 V) and E_B at the FOCUS CENT control. Since an optimum focus voltage changes due to the variations in characteristics of the CRT, set E_B so that the optimum focus is obtained when the [FOCUS] and [INTEN] controls are set to their respective mid-positions. A pulse is supplied from T1013 via C1255 and R1260. The positive peak voltage is limited to E_B by D1282 and the negative peak voltage is limited to E_C set by the [INTEN] and [FOCUS] controls.
Then, a chopped waveform having the envelope of the difference between E_B and E_C appears at point (Q) (see the block diagram).

The chopped waveform is supplied to D1284, and the negative peak voltage is clamped to E_{FR} (-1165 V). The positive peak voltage is rectified by D1283 to generate a positive DC voltage. As a result, the voltage whose DC level is shifted to the level higher than E_{FR} is produced, and is applied to P1 as the focus voltage.

The relationship between the intensity of the CRT and the voltage for the optimum focus is not linear. Consequently, the change in E_C caused when the INTEN control is adjusted is approximated to the actual CRT characteristics using the polygonal line characteristics.

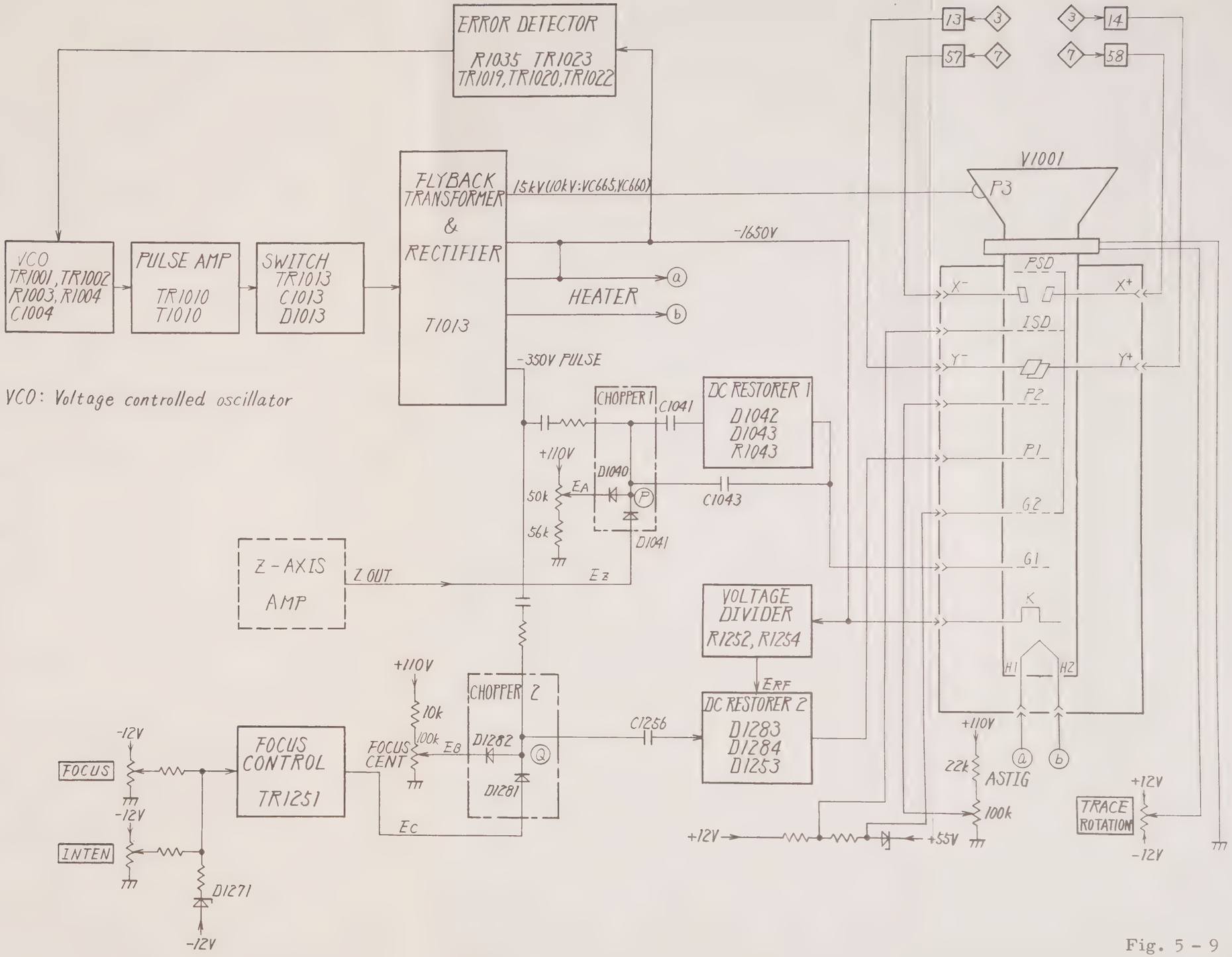
ERROR DETECTOR
R1035 TR1023
TR1019, TR1020, TR1022
VCO
TR1001, TR1002
R1003, R1004
C1004
PULSE AMP
TR1010
T1010
SWITCH
TR1013
C1013
D1013
FLYBACK
TRANSFORMER
&
RECTIFIER
T1013
15kV(10kV:VC665,VC660)
-1650V
HEATER
-350V PULSE
VCO: Voltage controlled oscillator
CHOPPER 1
C1041
DC RESTORER 1
D1042
D1043
R1043
+110V
D1040
EA
50k
56k
C1043
D1041
Z-AXIS
AMP
Z OUT
Ez
VOLTAGE
DIVIDER
R1252, R1254
ERF
+110V
CHOPPER 2
10k
100k
FOCUS
CENT
EB
D1282
D1281
C1256
DC RESTORER 2
D1283
D1284
D1253
FOCUS
CONTROL
TR1251
-12V
FOCUS
-12V
INTEN
D1271
-12V
EC
+12V
+55V
+110V
22k
ASTIG
100k
TRACE
ROTATION
+12V
-12V
V1001
P3
PSD
X-
X+
ISD
Y-
Y+
P2
P1
G2
G1
K
H1
H2
13
3
3
14
57
7
7
58

Fig. 5 - 9

5.11 POWER (◇11◇)

Outline

This circuit supplies the voltages to the circuit performing the NON STORE operation.
This circuit is a power supply circuit using a switching regulator, and uses hybrid IC IC1501 (STK7308) as a switching circuit. Figure 5-10 is the simplified circuit diagram of this circuit.
When switching transistor TR5 in IC1501 is on, the energy is stored in pulse transformer T1501 by the collector current. The stored energy is emitted to the secondary circuit while TR5 is off. The feedback loop circuit controls the duration of the on and off periods to control the transfer amount of energy, i.e., to stabilize the output.
The description of the major functions follows.

(1) Switching operation
(2) Stabilizing operation of output
(3) Protection circuit of switching transistor

(1) Switching operation

The on and off operation is described.

(i) When the power switch is turned to on, the positive voltage is applied to the base of switching transistor TR5 in IC1501 via starting resistors R1503 and R1504, and TR5 is turned to on. Thus, the collector current Ic flows to the primary winding N1 of T1501.

(ii) The voltage induced between terminals ② (positive) and ③ (negative) turns TR4 to on, increases the base current of TR5, and increases the collector current Ic.

(iii) When the collector current Ic of TR5 reaches to saturation, the induced voltage of N2 turns to zero, and TR5 turns to off.

(iv) The energy stored in T1501 becomes a current and fed to the secondary wiring N4 (N5 through N8), and is emitted through D1513.

(v) The voltage induced at N2 (terminal ② : positive) turns TR5 on again.

The above operations are repeated.

The collector current of TR4, i.e., the base current of TR5, becomes the constant-current controlled by zener diode D1514 and resistor R9 in IC1501. (ZD3 is off because the zener voltage of zener diode D1514 is 2.4 V, and that of zener diode ZD3 in IC1501 is 5.1 V.)
When the positive feedback induced at N2 exceeds the fixed value, D1515 is conducted and then TR1514 is turned to on.
Thus, the base current of TR4 is decreased, the collector current of TR4, i.e., the base current of TR5 is also decreased, and the collector current of TR5 is decreased.
These operations prevent the collector current of TR5 from flowing excessively.

(2) Stabilizing operation of output

The DC voltage (approx. -28V) is produced by rectifying the AC voltage fed back from winding N4 to windings N2 and N3 when TR5 is off. This DC voltage is divided, and added to the base of ERROR DETECTOR TR1 to stabilize the voltage of regulator output. In other words, the emitter potential of TR1 maintained constant by zener diode ZD1 is compared with the base potential of TR1 and the error signal is detected. This error signal is amplified by TR2, and supplied to the base of TR3, and the collector current of TR3 is thus controlled.
When the output voltage of the regulator rises, the collector current of TR3 increases, and the base current of TR4 is decreased.
Consequently, the base current of TR5 is also decreased and the saturation point of the collector current of TR5 is decreased. In other words, the amount of energy transferred to the secondary circuits of T1501 is reduced by making the on-duration of TR5 short. The voltage across R1502 is supplied to the base of TR2 through R1507 to match the timing to turn TR5 to off, i.e., the timing to control the collector current of TR3 with the timing of the peak of the collector current of TR5.

(3) Protection circuit of the switching transistor

Circuit protection after turning power to on

(i) Immediately after the power switch is turned to on, triac thyristor D1502 is off, and the charging current of C1508 (and C1509) flows to R1501. This prevents the rush current from giving damage to the circuits.
The voltage induced at N2 is supplied to D1502 as a negative trigger pulse. Then, D1502 turns to on, and this power circuit becomes a steady state.

(ii) Immediately after the power switch is turned to on, the base voltage of TR1 is much higher than the emitter voltage of TR1, compared with the steady operation state, because the charging speed of C1508 and C1507 is different.

As a result, the collector current of TR3 increases, and the base current of TR4 decreases. The base current of TR5 decreases, and the collector current of TR5 is limited to a small amount. After C1508 and C1507 are charged, this power circuit becomes a steady state.

Circuit for protecting the excessive current

D1502 is a 3.0 V zener diode, and determines the upper limit of the base current of TR5 together with D1503 and R1502. This prevents the excessive current from flowing to TR5.

Others

The LINE TRIG signal for the line lock is taken out from the primary line. After the signal passes through photo coupler IC1519, the waveform is shaped and supplied to the TRIG circuit via 15 .

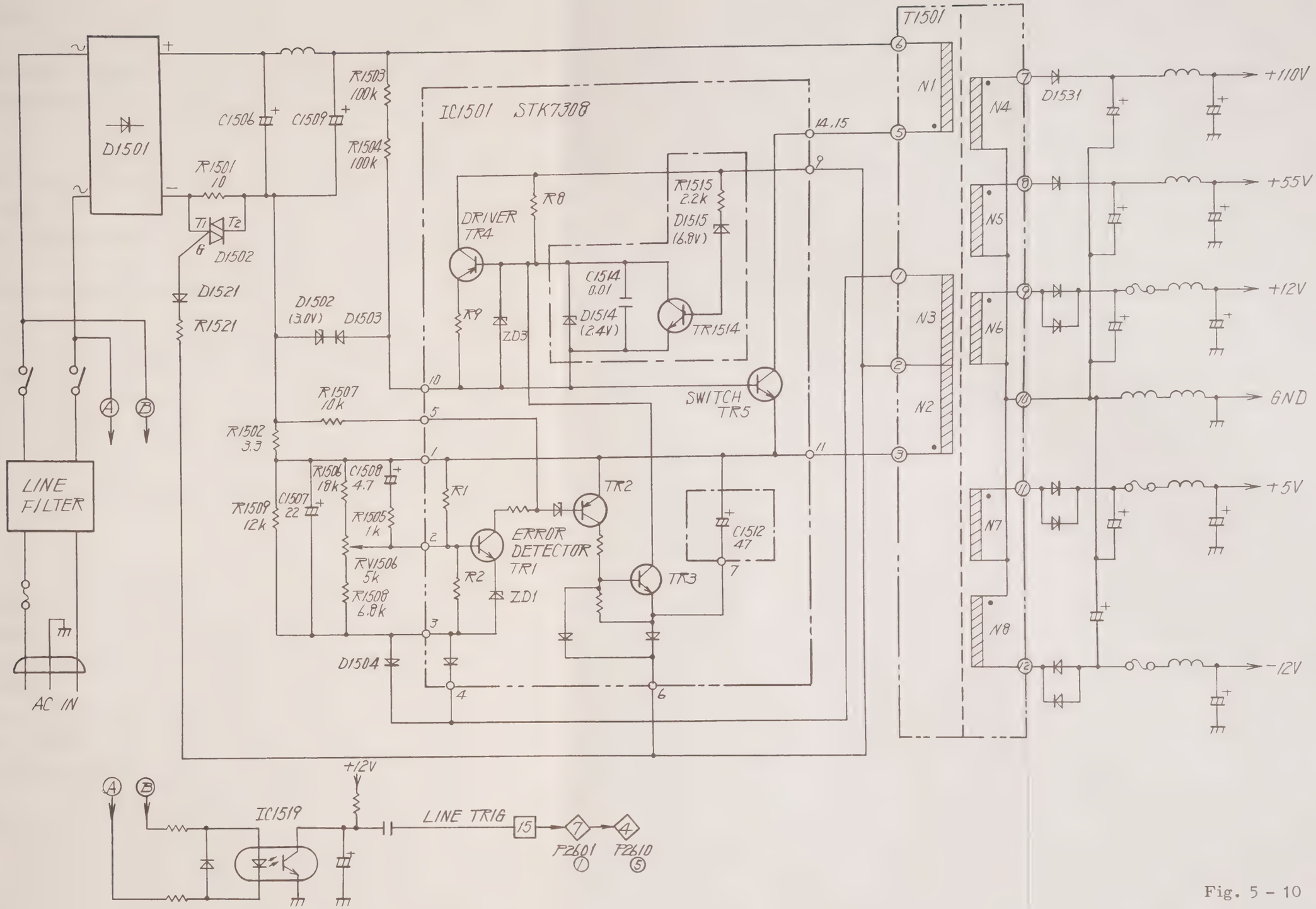
T1501
IC1501 STK7308
D1501
C1506
C1509
R1503 100k
R1504 100k
R1501 10
T1
T2
G
D1502
D1521
R1521
D1502 (3.0V)
D1503
R8
DRIVER TR4
R9
ZD3
R1515 2.2k
D1515 (6.8V)
C1514 0.01
D1514 (2.4V)
TR1514
SWITCH TR5
14,15
9
10
5
1
11
R1507 10k
R1502 3.3
R1506 18k
C1508 4.7
R1509 12k
C1507 22
R1505 1k
RV1506 5k
R1508 6.8k
R1
TR2
ERROR DETECTOR TR1
R2
ZD1
TR3
C1512 47
7
2
3
4
6
D1504
N1
N2
N3
N4
N5
N6
N7
N8
D1531
+110V
+55V
+12V
GND
+5V
-12V
A
B
LINE FILTER
AC IN
+12V
IC1519
LINE TRIG
15
P2601
P2610

Fig. 5 - 10

5.12 V INTERFACE (⟨12⟩)

This circuit switches the flow of the vertical signals. The signal flow is determined by each mode of the instrument as described below.

(1) NON STORE mode (when the instrument is used as a real time oscilloscope)
(2) NORM mode with the vertical mode set to the mode other than ADD
(3) NORM mode with the vertical mode set to ADD

Fig. 5-11 is a detailed block diagram of this circuit. The RTO/$\overline{\text{STR}}$ and the $\overline{\text{ADD}}$ are the control signals which determine the route of the vertical signal flow.
These control signals determine the state (high or low) of [F], [G], [H], [I], [J], [K] and [L], which determines the route of the vertical signal flow. Table shows the relationship among the V MODE, control signals and [F] through [L].

Table 5-4

	V MODE	RTO/$\overline{\text{STR}}$	$\overline{\text{ADD}}$	[F]	[G]	[H]	[I]	[J]	[K]	[L]
NON STORE	(1) All modes	H	H	H	L	L	H	H	L	H
NORM	(2) Except for ADD	L	H	L	H	L	L	H	H	L
	(3) ADD	L	L	L	H	H	L	L	L	H

Note 1 $\overline{\text{ADD}}$: L only when in the storage (NORM) mode and in the ADD mode.
H when in the RTO (NON STORE) mode and in the ADD mode.

Note 2 RTO: Real time oscilloscope

Description of each mode follows.

(1) NON STORE (real time oscilloscope mode)
Fig. 5-12 shows the circuit state and the signal flow. [F] is a signal which switches NON STORE and NORM, and goes high when NON STORE is selected. In this case, D5001 and D5011 are off, and TR5000 and TR5012 operate as switching transistors. $\overline{\text{CH1 DISP}}$ and $\overline{\text{CH2 DISP}}$ are both valid.
As shown in Table 5-4, [G], [H] and [K] are all low, and TR5020, TR5060 and TR5070 are all off. Consequently, no signal flows to STR CH1 V AMP (1) and STR CH2 V AMP (2).
Each of TR5002, TR5024 and TR5074 is a bias control circuit. Since [I] and [L] are high, TR5024 and TR5074 are on.

(2) NORM (storage oscilloscope mode) V MODE is set to the mode other than ADD.
Fig. 5-13 shows the circuit state and the signal flow. In NORM, [F] goes low. Consequently, $\overline{\text{D5001}}$ and $\overline{\text{D5011}}$ are on, and TR5000 and TR5012 are off. $\overline{\text{CH1 DISP}}$ and $\overline{\text{CH2 DISP}}$ are not valid, and D73, D74, D5000, D173, D174 and D5012 are all off.
Since [H] is low, TR5060 is off, and D5062 and D5063 are off, too. On the other hand, [G] and [K] are high, TR5020 and TR5070 become on. Consequently, D5022, D5023, D5072 and D5073 become on, and the CH1 V SIG and the CH2 V SIG can pass through the STR CH1 V AMP (1) and the STR CH2 V AMP (1), respectively.

In the NORM mode (storage oscilloscope mode), the display of the CH1 V SIG and the CH2 V SIG is switched by the circuit in the following stage of the STR V AMP (1).
Since [I] and [L] are low, TR5024 and TR5074 become off.

(3) NORM V MODE is set to ADD.
Fig. 5-14 shows the circuit state and the signal flow.
As in the case of (2), TR5000, TR5012, D73, D74, D5000, D173, D174, and D5012 become off, and D5022 and D5023 become on. $\overline{\text{CH1 DISP}}$ and $\overline{\text{CH2 DISP}}$ are not valid.
Since [H] is high and [K] is low, D5062 and D5063 are on, and D5072 and D5073 become off.
As the result, the CH1 V SIG and the CH1 V SIG are added and fed out from the STR CH1 V AMP (1).

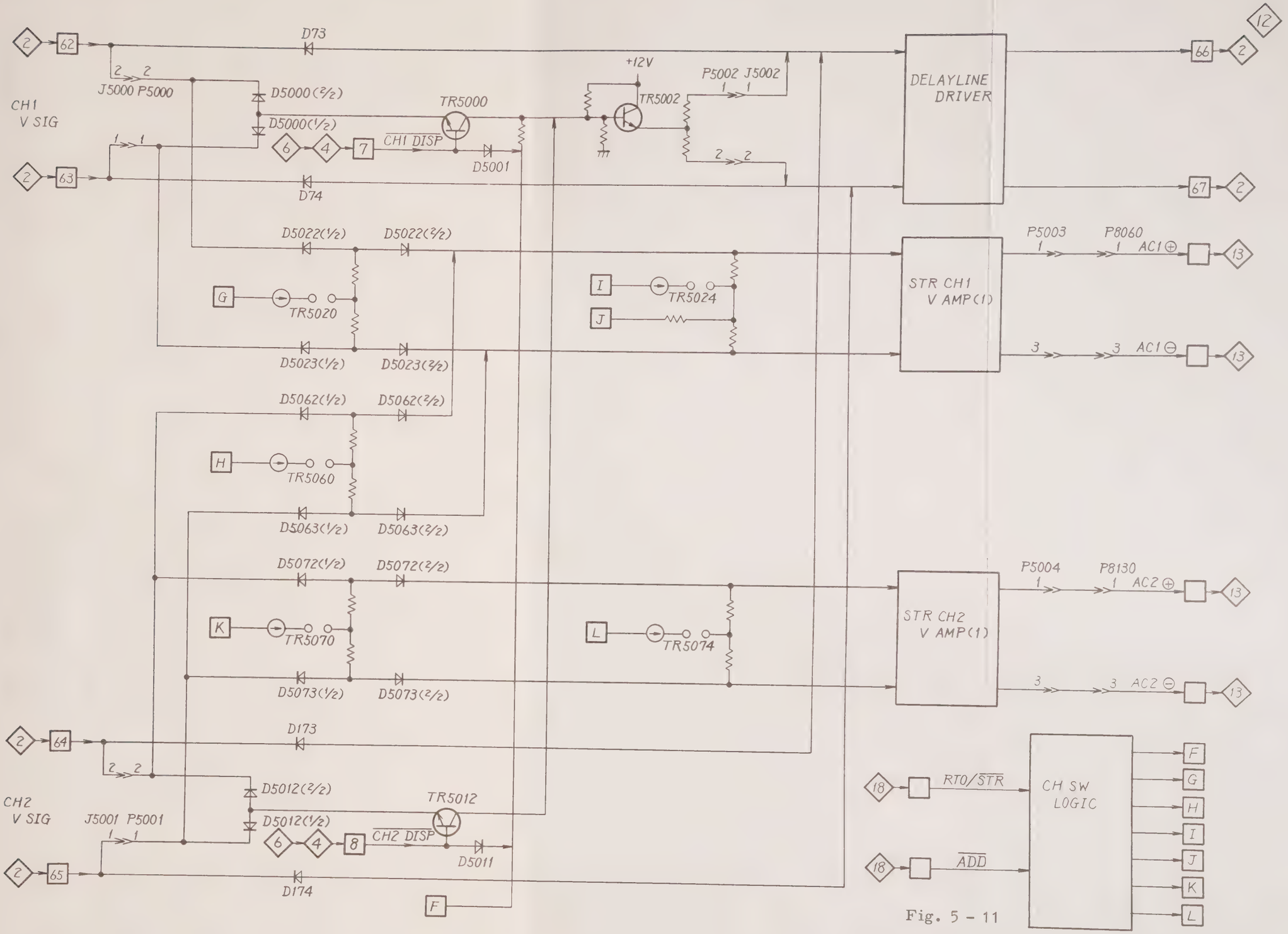
CH1
V SIG
J5000 P5000
D73
D5000(2/2)
D5000(1/2)
TR5000
CH1 DISP
D5001
D74
+12V
TR5002
P5002 J5002
DELAYLINE
DRIVER
D5022(1/2)
D5022(2/2)
TR5020
D5023(1/2)
D5023(2/2)
TR5024
D5062(1/2)
D5062(2/2)
TR5060
D5063(1/2)
D5063(2/2)
D5072(1/2)
D5072(2/2)
TR5070
D5073(1/2)
D5073(2/2)
TR5074
P5003
P8060
AC1⊕
AC1⊖
STR CH1
V AMP(1)
P5004
P8130
AC2⊕
AC2⊖
STR CH2
V AMP(1)
D173
CH2
V SIG
J5001 P5001
D5012(2/2)
D5012(1/2)
TR5012
CH2 DISP
D5011
D174
RT0/STR
ADD
CH SW
LOGIC

Fig. 5 - 11

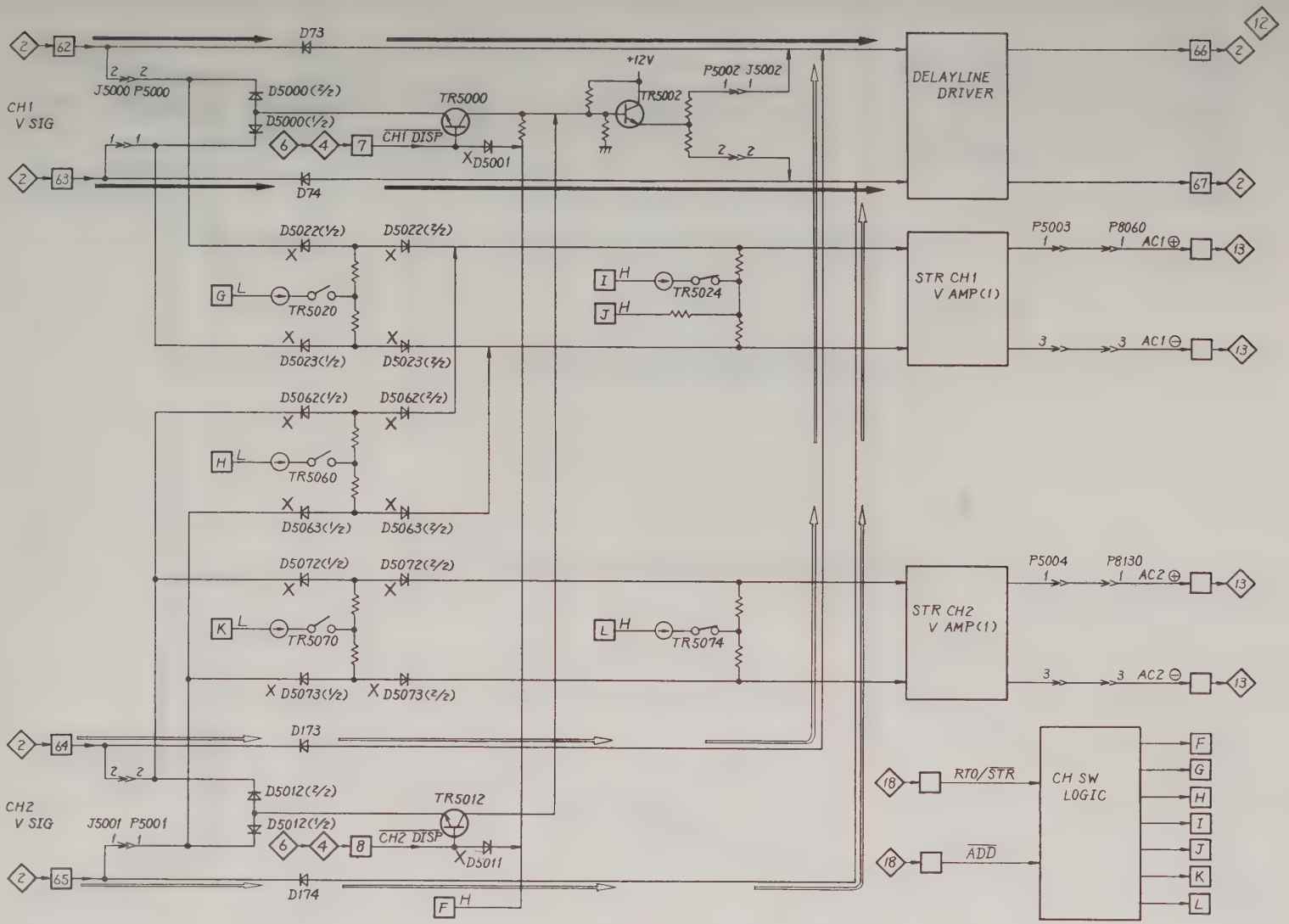
CH1 V SIG
CH2 V SIG
J5000 P5000
J5001 P5001
D73
D74
D173
D174
D5000(½)
D5000(½)
D5012(½)
D5012(½)
TR5000
TR5012
CH1 DISP
CH2 DISP
XD5001
XD5011
+12V
TR5002
P5002 J5002
DELAYLINE DRIVER
STR CH1 V AMP(1)
STR CH2 V AMP(1)
P5003
P8060
AC1⊕
AC1⊖
P5004
P8130
AC2⊕
AC2⊖
D5022(½)
D5022(½)
D5023(½)
D5023(½)
TR5020
TR5024
D5062(½)
D5062(½)
D5063(½)
D5063(½)
TR5060
D5072(½)
D5072(½)
D5073(½)
D5073(½)
TR5070
TR5074
RTO/STR
ADD
CH SW LOGIC

Fig. 5 - 12

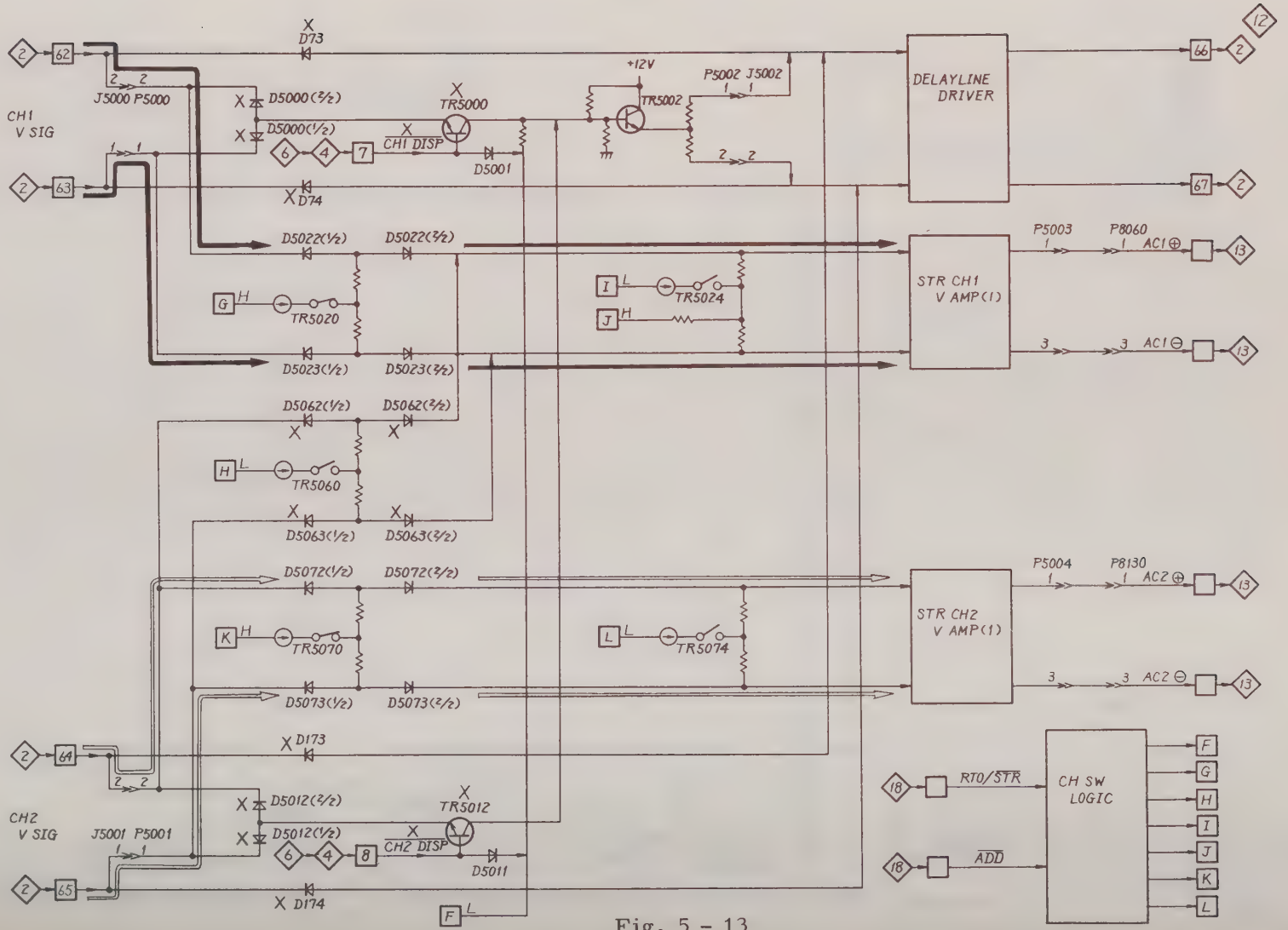
CH1
V SIG
CH2
V SIG
J5000 P5000
J5001 P5001
D73
D74
D173
D174
D5000(3/2)
D5000(1/2)
D5012(3/2)
D5012(1/2)
TR5000
TR5012
CH1 DISP
CH2 DISP
D5001
D5011
+12V
TR5002
P5002 J5002
DELAYLINE
DRIVER
D5022(1/2)
D5022(3/2)
D5023(1/2)
D5023(3/2)
TR5020
TR5024
STR CH1
V AMP(1)
P5003
P8060
AC1⊕
AC1⊖
D5062(1/2)
D5062(3/2)
D5063(1/2)
D5063(3/2)
TR5060
D5072(1/2)
D5072(3/2)
D5073(1/2)
D5073(3/2)
TR5070
TR5074
STR CH2
V AMP(1)
P5004
P8130
AC2⊕
AC2⊖
RTO/STR
ADD
CH SW
LOGIC

Fig. 5 - 13

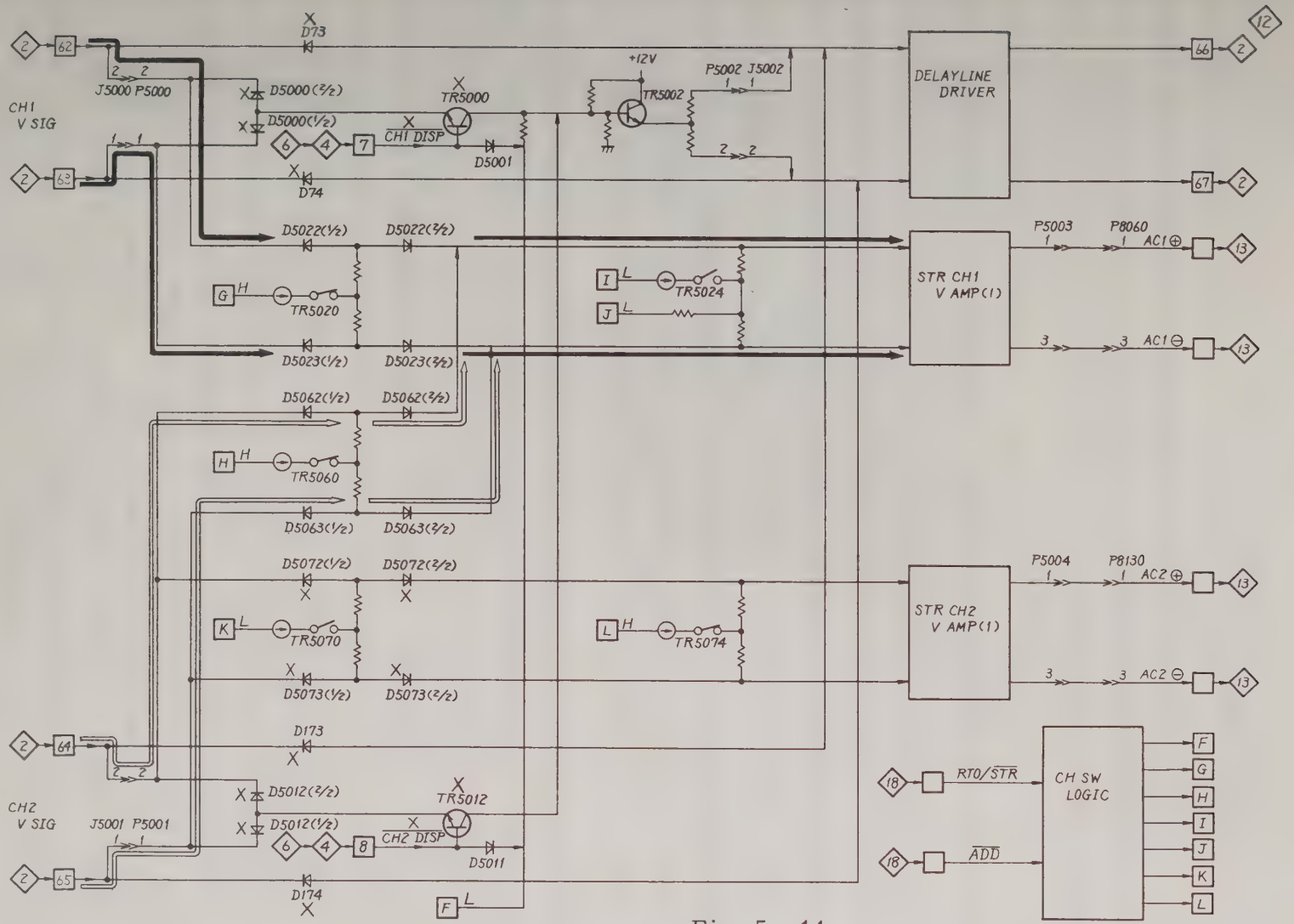
CH1
V SIG
CH2
V SIG
J5000 P5000
J5001 P5001
D73
D74
D173
D174
D5000(1/2)
D5000(2/2)
D5001
D5011
D5012(1/2)
D5012(2/2)
TR5000
TR5012
CH1 DISP
CH2 DISP
+12V
TR5002
P5002 J5002
DELAYLINE
DRIVER
D5022(1/2)
D5022(2/2)
D5023(1/2)
D5023(2/2)
TR5020
TR5024
STR CH1
V AMP(1)
P5003
P8060
AC1⊕
AC1⊖
D5062(1/2)
D5062(2/2)
D5063(1/2)
D5063(2/2)
TR5060
D5072(1/2)
D5072(2/2)
D5073(1/2)
D5073(2/2)
TR5070
TR5074
STR CH2
V AMP(1)
P5004
P8130
AC2⊕
AC2⊖
RTO/STR
ADD
CH SW
LOGIC

Fig. 5 - 14

5.13 TRACK HOLDER (◇13◇)

Fig. 5-15 is a detailed block diagram of this circuit. Refer to the attached schematic diagram, too. The CH1 circuit is almost identical with the CH2 circuit, and description is made on the CH1 circuit.

The AC1 signal sent from ◇12◇ is applied to the STR CH1 V AMP (2), and the paraphase signal is converted into the single-ended signal. TR8062 is an emitter follower.
The output of the STR CH1 V AMP (2) is applied to the SAMPLE HOLDER SW (1) in the next stage. This is a high speed switch which can correspond to the sampling rate. The operation of this switch is controlled by the SW DRIVER (1). When Ⓐ is high and Ⓑ is low, the switch is in the close state, and the signal passes through the switch. When Ⓐ is low and Ⓑ is high, the switch is in the open state, and the signal does not pass.
The signal which passes through the SAMPLE HOLDER SW (1) is applied to the BUFFER (1). The BUFFER (1) is of a high input impedance and a low output impedance, and the gain is designed to be 1 correctly. (The output is 1 with respect to the 1 input.) TR8063 is a source follower and TR8066 is an emitter follower. CH1 SAMPLE HOLD BALANCE RV8060 controls an entire offset. A fine offset control for each mode is made by the two RV's in ◇14◇. The amplitude of the input of the A/D converter is limited (The maximum amplitude is determined), and the output of the BUFFER (1) is designed to be 0 ±0.5 V. Namely, the voltage of -0.5 to +0.5 V at the output point of the BUFFER (1) corresponds to 10 div on the CRT. (Correct A/D conversion is not ensured to the signal in excess of the voltage range.)
In the real time sampling mode, the SH1 CLK is always low and $\overline{\text{SH1 CLK}}$ is high. Consequently, TR8068 is off and TR8069 is on. Ⓐ goes high and Ⓑ goes low. Thus, the SAMPLE HOLDER SW (1) is in the close state, and the signal always passes.

In the equivalent time sampling mode, the SH1 CLK goes high and the $\overline{\text{SH1 CLK}}$ goes low at the sampling point. (Fig. 5-16) Consequently, TR8068 is on and TR8069 is off. (A) in Fig. 5-15 goes low and (B) goes high. Thus the SAMPLE HOLDER SW (1) is in the open state, and HOLD CAPACITOR C8064 holds the voltage at the sampling point.

Before the $\overline{\text{SH1 CLK}}$ goes low and the $\overline{\text{SH1 CLK}}$ goes high at the end of a sweep, the voltage of the HOLD CAPACITOR is converted into the digital signal in the A/D converter (◇14◇) via the BUFFER (1) and the 2X AMP (◇14◇), because the operation speeds of the BUFFER (1), the 2X AMP and the A/D converter are slower than the switching speed of the SAMPLE HOLDER SW (1).

The CLAMPER (1) is provided to:

(1) limit the voltages at (A) and (B) in a given range when the SAMPLE HOLDER SW (1) is off, and

(2) limit the output range of the BUFFER (1).

TR8065 is an emitter follower, and the clamp voltage tracks the output voltage. The tracking range is limited to ±0.7 by D8067.

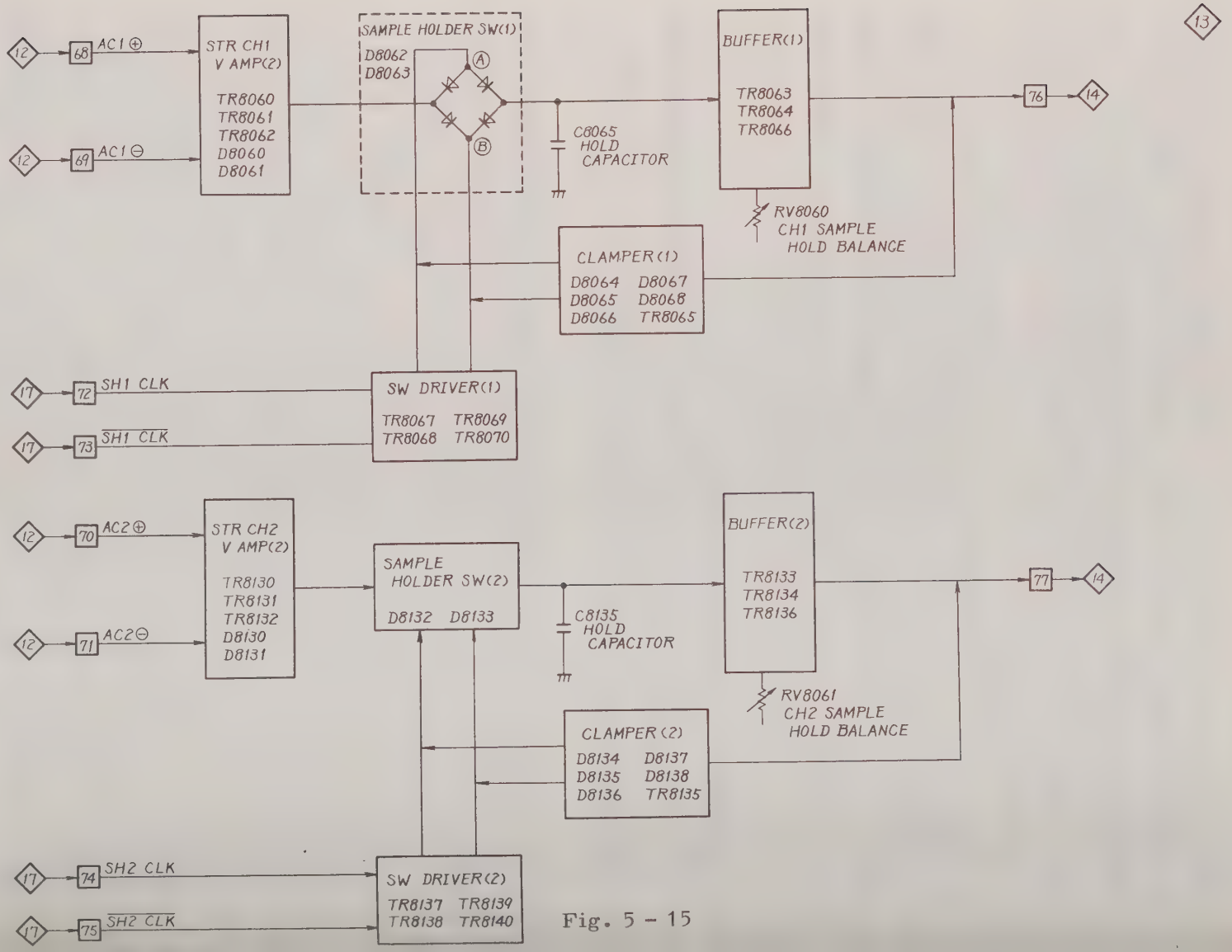
12
68
AC1⊕
STR CH1
V AMP(2)
TR8060
TR8061
TR8062
D8060
D8061
12
69
AC1⊖
SAMPLE HOLDER SW(1)
D8062
D8063
A
B
C8065
HOLD
CAPACITOR
BUFFER(1)
TR8063
TR8064
TR8066
76
14
13
RV8060
CH1 SAMPLE
HOLD BALANCE
CLAMPER(1)
D8064 D8067
D8065 D8068
D8066 TR8065
17
72
SH1 CLK
17
73
SH1 CLK
SW DRIVER(1)
TR8067 TR8069
TR8068 TR8070
12
70
AC2⊕
STR CH2
V AMP(2)
TR8130
TR8131
TR8132
D8130
D8131
12
71
AC2⊖
SAMPLE
HOLDER SW(2)
D8132 D8133
C8135
HOLD
CAPACITOR
BUFFER(2)
TR8133
TR8134
TR8136
77
14
RV8061
CH2 SAMPLE
HOLD BALANCE
CLAMPER(2)
D8134 D8137
D8135 D8138
D8136 TR8135
17
74
SH2 CLK
17
75
SH2 CLK
SW DRIVER(2)
TR8137 TR8139
TR8138 TR8140

Fig. 5 - 15

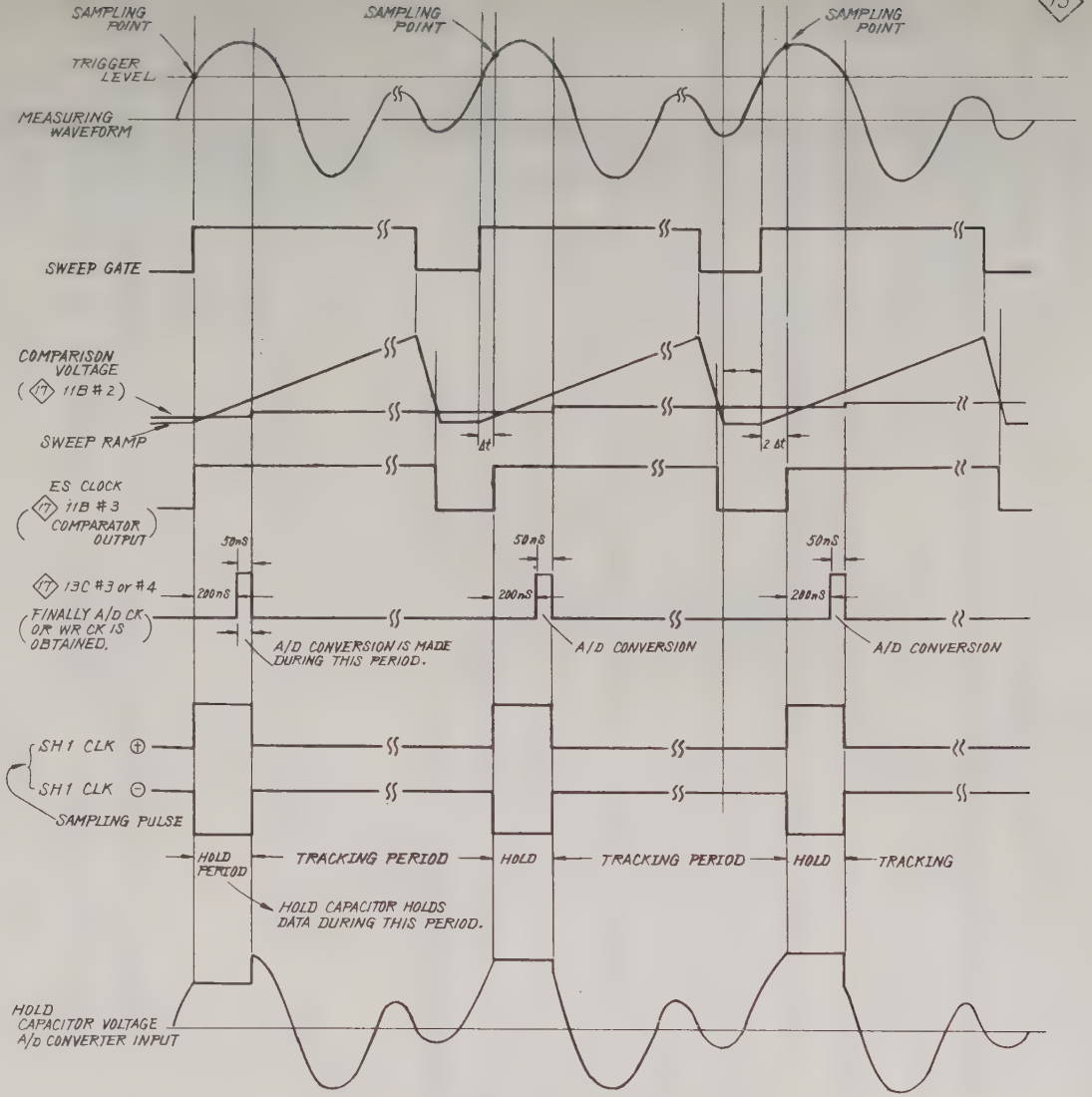

EQUIVALENT TIME SAMPLING

Fig. 5 - 16

5.14 A/D CONVERTER CIRCUIT (◇14◇)

Fig. 5-17 is a detailed block diagram of the A/D converter circuit.

The offset voltage of the input amplifier is different in the case that the TRACK HOLDER ◇13◇ is in the hold state of the equivalent sampling mode from the case that the TRACK HOLDER is in the track state of the sequential sampling mode (except for the equivalent sampling mode). So, the offset voltage is adjusted separately in the equivalent sampling mode (RV5202 in the CH1 signal) and in the sequential sampling mode (RV5201 in the CH1 signal).

This A/D converter is a flash type and is provided with the ECL output.

The converted 8-bit digital signal fed out with the ECL level is translated to the TTL level. The output signal is fed to the latch circuit ◇16◇ in the next stage.

The logic of the 8-bit data is reversed when the ECL level is translated to the TTL level as shown below.

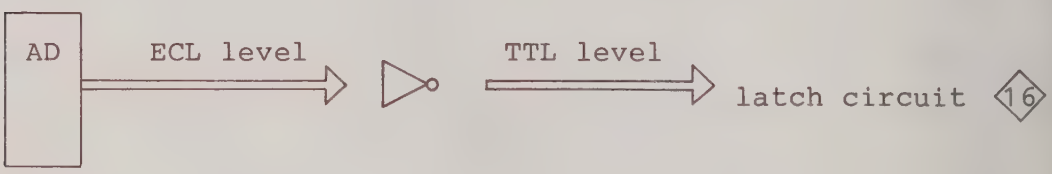

The range of the input signal of the A/D converter is 0 to -2 V, and the reference voltagae is adjusted by RV5240.

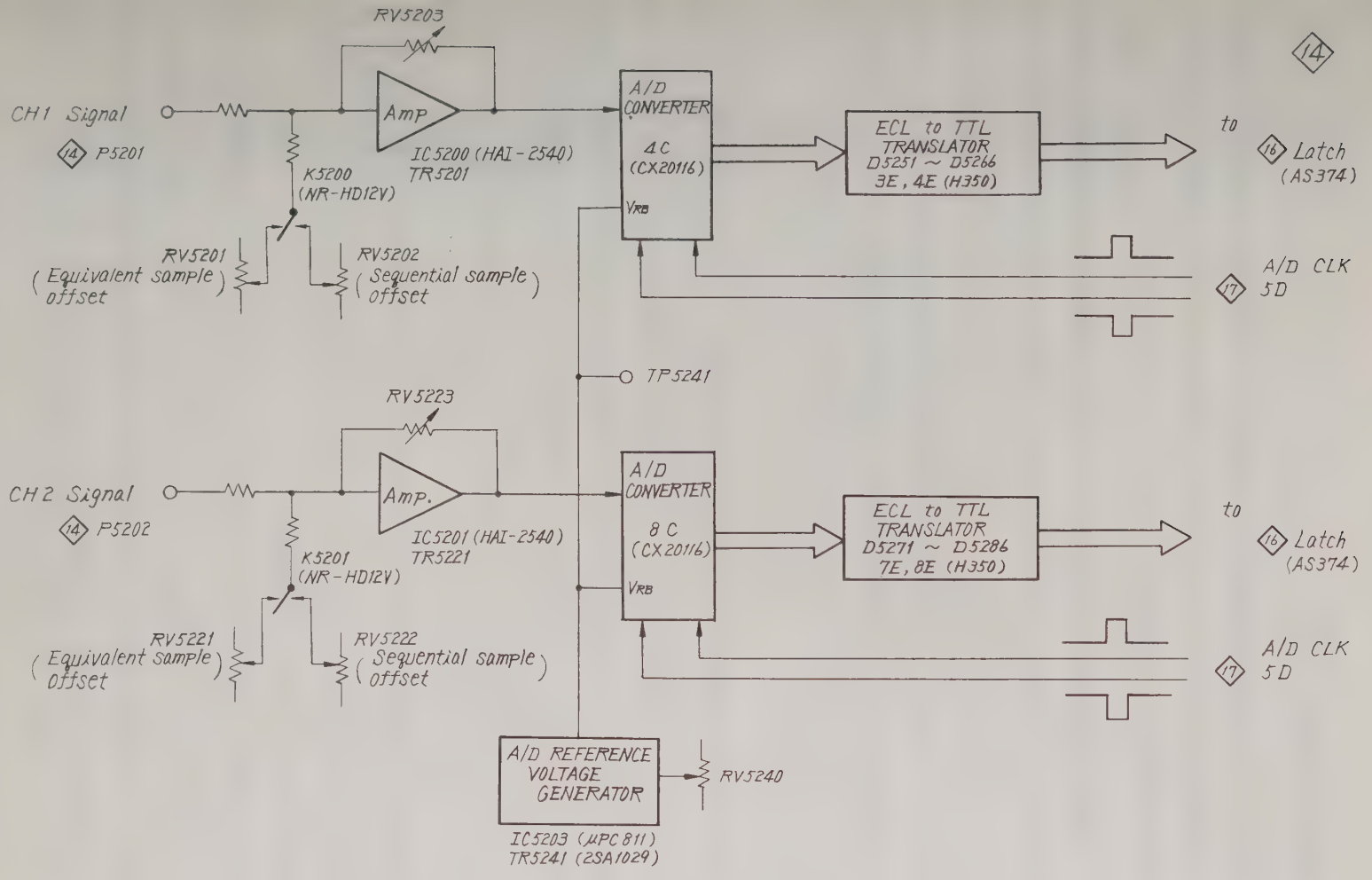

A/D CONVERTER CIRCUIT
BLOCK DIAGRAM

Fig. 5 - 17

5.15 PEAK DETECTOR (15)

Fig. 5-18 is a detailed block diagram of this circuit. The PEAK DETECTOR circuit for CH1 is identical with that for CH2, and the description on CH1 follows.

When the envelope mode is selected, the PEAK-DET-P signal goes high by means of the microcomputer, and the sampling clock is fixed to 20 MHz regardless of the time range setting.
At first, when the sampling starts, the first data sampled by 20 MHz is latched to the SAMPLED DATA LATCH circuit. The latched sampled data is latched to the MAX DATA LATCH circuit and the MIN DATA LATCH circuit as the max data and the min data, respectively.

When the second sampled data is latched to the SAMPLED DATA LATCH circuit, the first max data and the min data are compared with the second latched data by the MAX COMPARATOR and the MIN COMPARATOR. For example, if the latched data is greater than the max data, the latch data is latched to the MAX DATA LATCH circuit. If the latched data is smaller than the max data, the latch data is not latched, and the max data is stored as it is.

As for the min data, the minimum data is latched or stored in the MIN DATA LATCH circuit as the min data. The PEAK DETECTOR CONTROLLER determines whether or not the latch data is latched as the max data or the min data.
As for the sampling after the 2nd time, the above sequence is repeated to compare the max data and the min data with the sampled data. This sequence continues until the WRCK is input. The WRCK is the clock to inform the write of the max data and the min data into the ACQ memory in the envelope mode. When the WRCK is input to the PEAK DETECTOR CONTROLLER. The

comparison by the MAX COMPARATOR and the MIN COMPARATOR is stopped, and the max data and the min data are transferred to the MAX DATA DRIVER and the MIN DATA DRIVER, respectively. Then the instrument is in the state that awaits the next sampling. The max data and the min data transferred to the MAX DATA DRIVER and the MIN DATA DRIVER are output in sequence to the ACQ MEMORY circuit ◇10◇ as the peak-detected data.

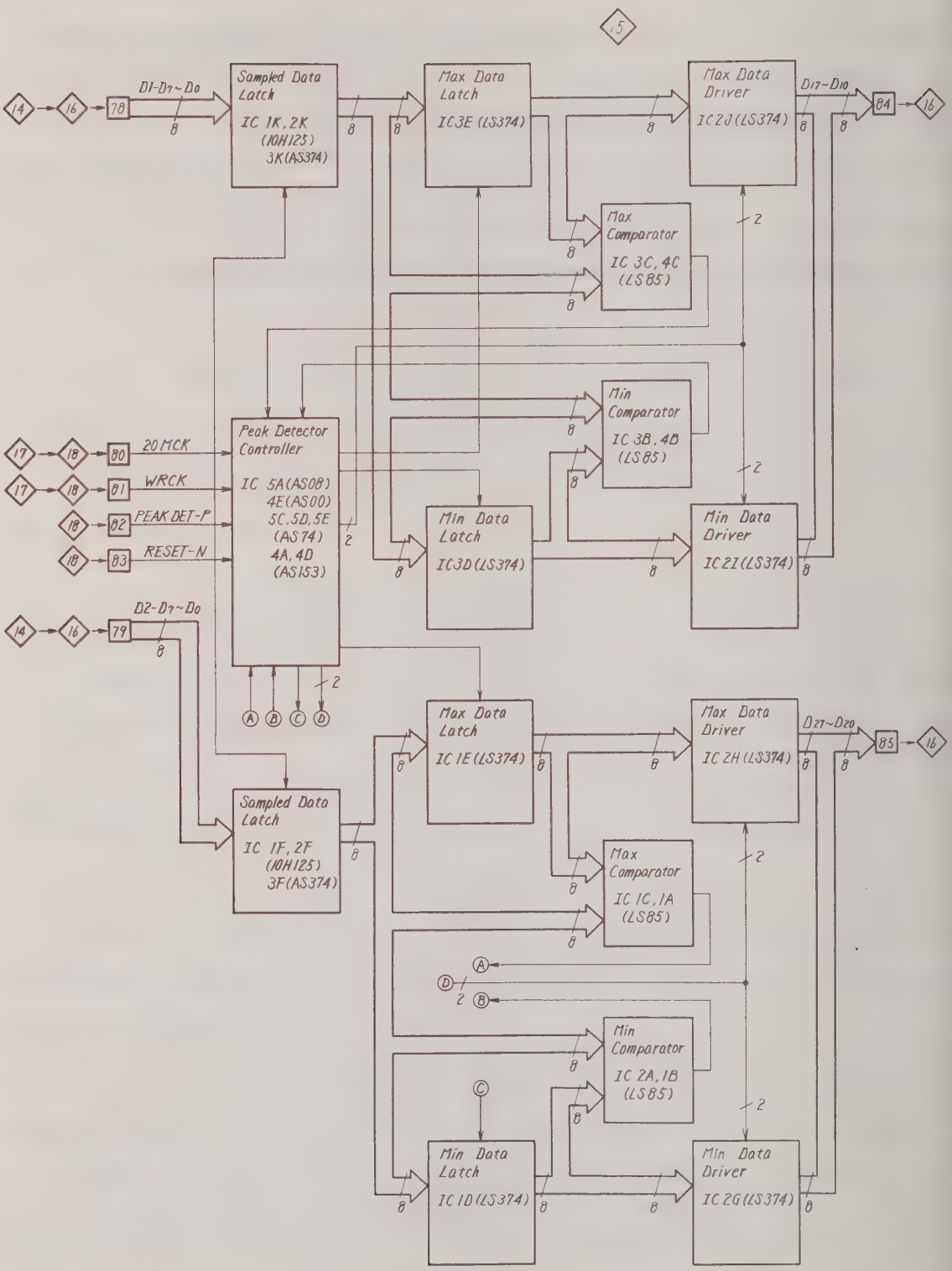
15
14
16
78
D1-D7~D0
8
Sampled Data Latch
IC 1K, 2K (10H125) 3K(AS374)
Max Data Latch
IC3E (LS374)
Max Data Driver
IC 2J (LS374)
D17~D10
84
Max Comparator
IC 3C, 4C (LS85)
2
Min Comparator
IC 3B, 4B (LS85)
Min Data Latch
IC3D (LS374)
Min Data Driver
IC 2I (LS374)
17
18
80
20 MCK
81
WRCK
82
PEAK DET-P
83
RESET-N
Peak Detector Controller
IC 5A(AS08) 4E(AS00) 5C,5D,5E (AS74) 4A, 4D (AS153)
79
D2-D7~D0
A
B
C
D
Max Data Latch
IC 1E (LS374)
Max Data Driver
IC 2H (LS374)
D27~D20
85
Sampled Data Latch
IC 1F, 2F (10H125) 3F(AS374)
Max Comparator
IC 1C, 1A (LS85)
Min Comparator
IC 2A, 1B (LS85)
Min Data Latch
IC 1D (LS374)
Min Data Driver
IC 2G (LS374)

Fig. 5 - 18

5.16 ACQUISITION MEMORY (◇16◇)

Fig. 5-19 is a detailed block diagram of this circuit (hereinafter called the ACQ Memory).
This circuit is composed of the CH1 ACQ Memory, the CH2 ACQ Memory, and the Memory Write/Read Control.
Since the CH1 ACQ Memory circuit is identical with the CH2 ACQ Memory circuit, only the CH1 ACQ Memory circuit is described below.

The CH1 ACQ Memory is a RAM circuit having memory capacity of 4k bytes. The RAM is composed of the four memory blocks of phase 0 through 3. The memory capacity of each block is 1k bytes which are obtained by one RAM of 1k x 8 bits.

The data of 4k bytes which corresponds to one waveform displayed on the CRT is stored in the memory during a sampling period of the input signal. The each sampled data is distributed to the blocks from phases 0 to 3 in sequence for storage.

The flip-flop circuit preceding each memory block is provided to process such distribution. Fig. 5-20 illustrates the timing diagram which shows the distribution and storage process of data.

The sampled data which has been converted into the digital data by the A/D CONVERTER circuit or the under-peak and the over-peak data (in the envelope mode) are input from 78 and 84 in sequence.
Strobe clock pulses LAT1, LAT2, LAT3, and LAT4 are input with the four-phase timing, synchronized with the incoming sampled data as shown in Fig. 5-20.

LAT1 is a strobe clock which latches data into F.F 1-1. LAT2 and LAT3 strobe F.F 2-1 and F.F 3-1, respectively.
LAT4 strobes the four flip-flops F.F 1-2, F.F 2-2, F.F 3-2, and F.F 4-2.

Therefore, DATA 0, DATA 1, and DATA 2 are latched to F.F 1-1, F.F 2-1, and F.F 3-1 by LAT1, LAT2, and LAT3, respectively. The fourth DATA 3 is latched to F.F 4-2 by the fourth phase clock LAT4. At the same time, the while DATA 0, DATA latch data F.F 1-1, F.F. 2-1, and F.F 3-1, are latched to F.F 1-2, F.F 2-2, and F.F 3-2 respectively. In the next block of F.F 1-2 through F.F 3-2, each data of DATA 4 is latched to F.F 1.2 through F.F 4-2 by the repetition of the above sequence. During one period of strobe pulse LAT4, flip-flops F.F 1-2 to F.F 4-2 hold the data.
The $\overline{OC}$ signal is low while sampling is being repeated and the output data of F.F 1-2 to F.F 4-2 is enabled and added to the input terminals of memories.
At this time, the $\overline{WE}$ signal also becomes the low level, and writes each data into the ACQ MEMORIES phase 0 to phase 3 simultaneously.
In this way, DATA 0 to DATA 3 are assigned and memorized into phase 0 to phase 3, respectively.

According to the above sequence, the specified number of the data continues to be written into the ACQUISITION MEMORY until the data sampling is completed.

After the data sampling, the microcomputer reads the data from the ACQUISITION MEMORY to transfer them to the DISPLAY MEMORY circuit by successively addressing D000 to DFFF which are assigned to the ACQUISITION MEMORY.

The most significant 10 bit signals (A9 to A0) of the address data are supplied from [86] through the DATA SELECTOR in the ACQ CONT circuit ◇18◇ to select the address of each memory.

The least significant 2 bit signals (AB1 and AB0) are transferred to the WRITE/READ control circuit, and decoded to enable only the DRIVER between the selected ACQUISITION MEMORY and the data bus (DB7-P to DB0-P).

At this time, the chip select signal CH1 ACQ-N is supplied to the CH1 ACQ MEMORY circuit from the ADDRESS DECODER in the DSO MICROCOMPUTER circuit ◇19◇ since the address which is assigned to the ACQUISITION MEMORY circuit is selected.

So each data in the memory device in the CH1 ACQ MEMORY circuit are enabled to be fed out.

However, only the data through the enabled DRIVER is read by the microcomputer.
The microcomputer reads the data assigned to the ACQUISITION MEMORY, updating the address from the desired address for reading all the 4 kW data in the ACQUISITION MEMORY.

In practice, the microcomputer reads out one data, transfers and writes it into the DISPLAY MEMORY circuit, and then reads the next data.

As for the CH2 ACQ MEMORY circuit operation, read LATCLK-42 and CH2 ACQ-N discussed in the above CH1 ACQ circuit operation as LATCLK-41 and CH1 ACQ-N, respectively.

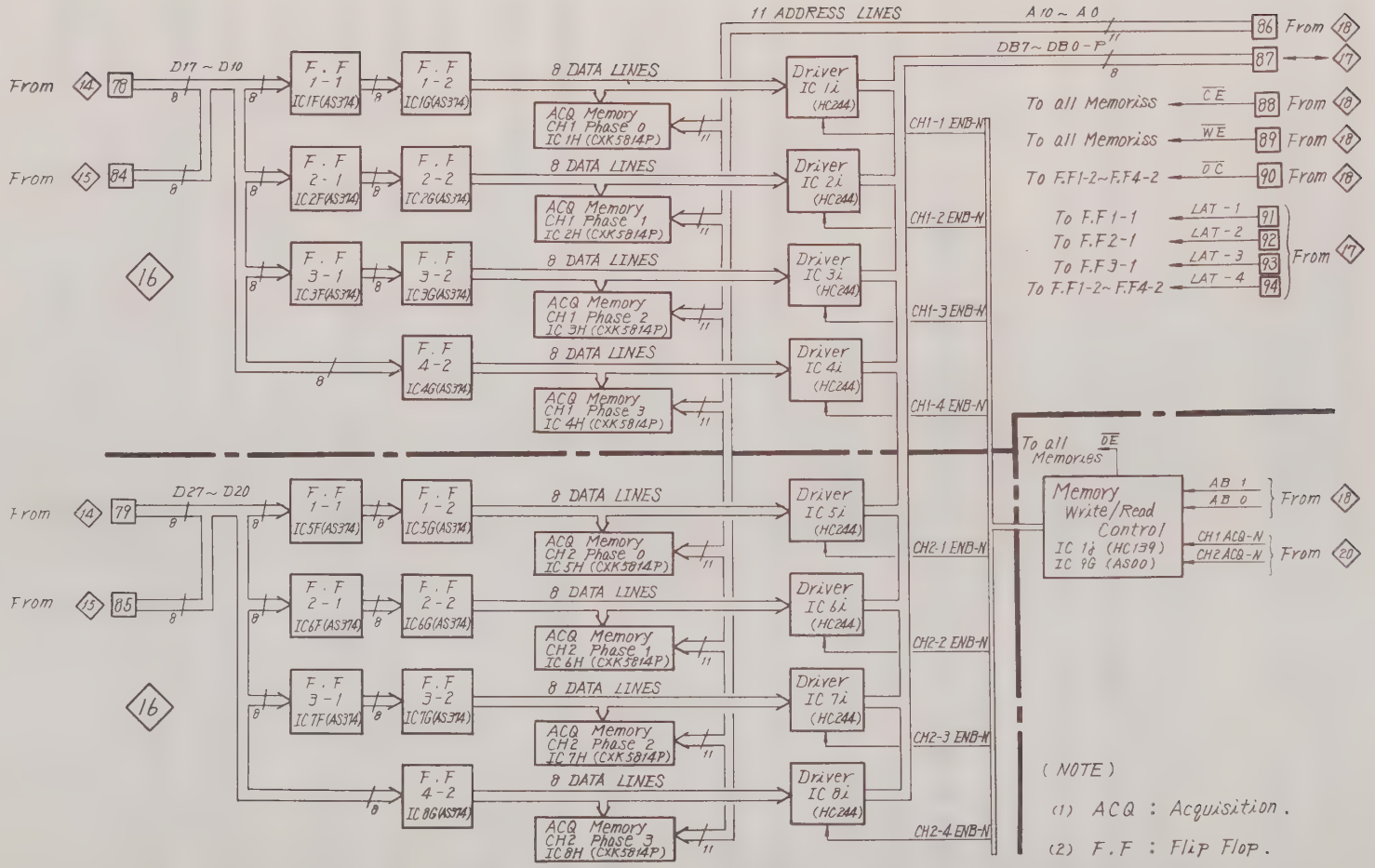

ACQUISITION MEMORY
BLOCK DIAGRAM

Fig. 5 - 19

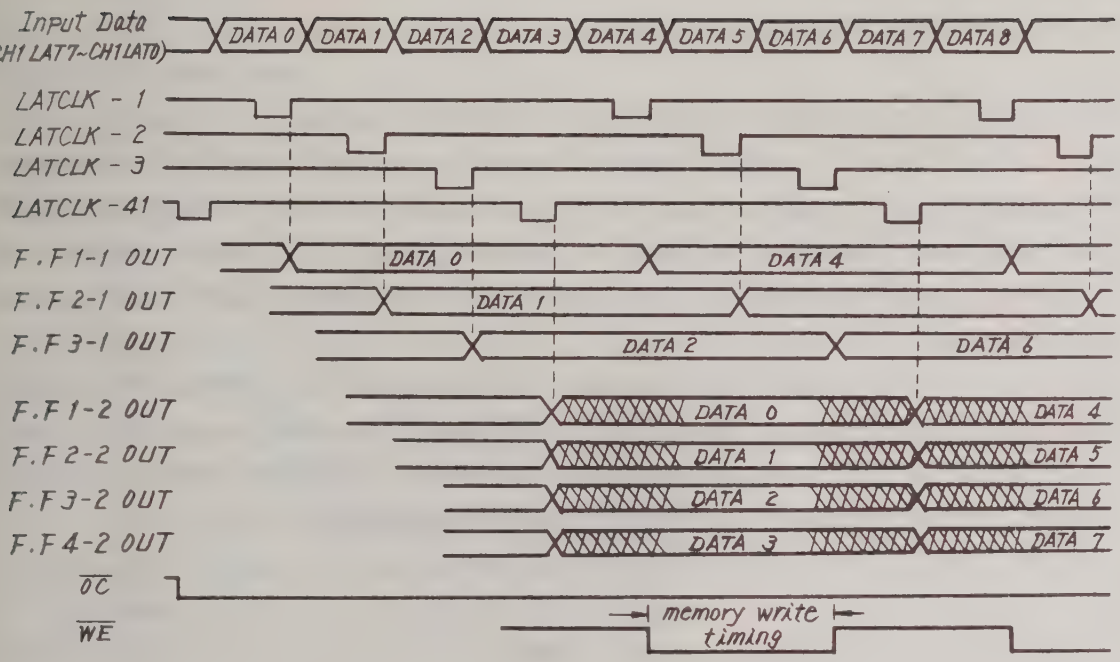

ACQ Memory Write Timing

Fig. 5-20

5.17 TIME BASE CIRCUIT (◇17◇)

Fig. 5-21 is a block diagram of this circuit.
The time base circuit generates the sampling clock of the frequency corresponding to the value set by the TIME/DIV switch, and consists of the master crystal oscillators of 100 MHz and 80 MHz, the divider circuits and the clock selectors.
The instrument has the horizontal resolution consisting 400 data per division. Therefore, if the TIME/DIV switch is set to T (sec), the clock frequency fs which samples the incoming signal is expressed by the following formula.

$$fs = \frac{400}{T} \quad (Hz)$$

In the equivalent sampling and the ranges other than 2 μs/div, the sample clocks of the frequency obtained by the above formula are generated. The sample clocks are selected by setting the clock selectors (1) to (3) and the programmable divider by the microcomputer.
For example, the sample frequency for 1 ms/div is 400 kHz. 1 of the clock selector (1) is selected and 20 MHz which is obtained by dividing the master oscillation frequency 80 MHz by 4 is selected from the output Y1. From the output Y2, 4 MHz which is obtained by dividing the 20 MHz by 5 is selected. This 4 MHz frequency is divided by 10 by clock divider 13E, and 400 kHz is obtained. In the programmable clock divider, n = 0, i.e. the 400 kHz frequency passes through the divider as is.
In the clock selector (2), 1 is selected, and in the clock selector (3), 0 is selected. The 400 kHz frequency is thus output as the sampling clock used for AD CLOCK and ACQ memory control.

Next, the clock generator circuit in the equivalent sampling mode is described.
The equivalent sample clock is output when 2 or 3 of the clock selector (2) shown in Fig. 5-21 is selected.
Fig. 5-22 is a block diagram of the equivalent sampled clock generator circuit. The equivalent sample clock is generated by comparing the sweep signal of the instrument with the output voltage of the D/A converter (11A). This principle is also used in the VC-6041 and the VC-6050.
Fig. 5-23 is a timing diagram of the equivalent sample clock generator circuit.
The sample clocks displaced slightly from the trigger point of the input signal are produced by dividing the sweep signal (10 divisions in the horizontal direction) of the instrument by 4000 by the 12-bit D/A converter. The 12-bit counter (HC4040) counts up at the falling edge of a gate signal. Therefore, the output voltage (ⓒ) of the D/A converter rises at each trigger. This output voltage and the sweep signal (ⓑ) are compared by the comparator, and the comparator output (ⓓ) goes high at the moment when the sweep signal becomes higher than the output voltage. The pulse generator circuit outputs the hold pulse (ⓔ) of approximately 250 ns by the rising edge of the comparator output.
◇13◇ TRACK HOLDER holds the incoming signal by the hold pulse. The equivalent sample A/D clock (ⓕ) is output 200 ns after the incoming signal is held, and the signal is then converted into a digital signal.

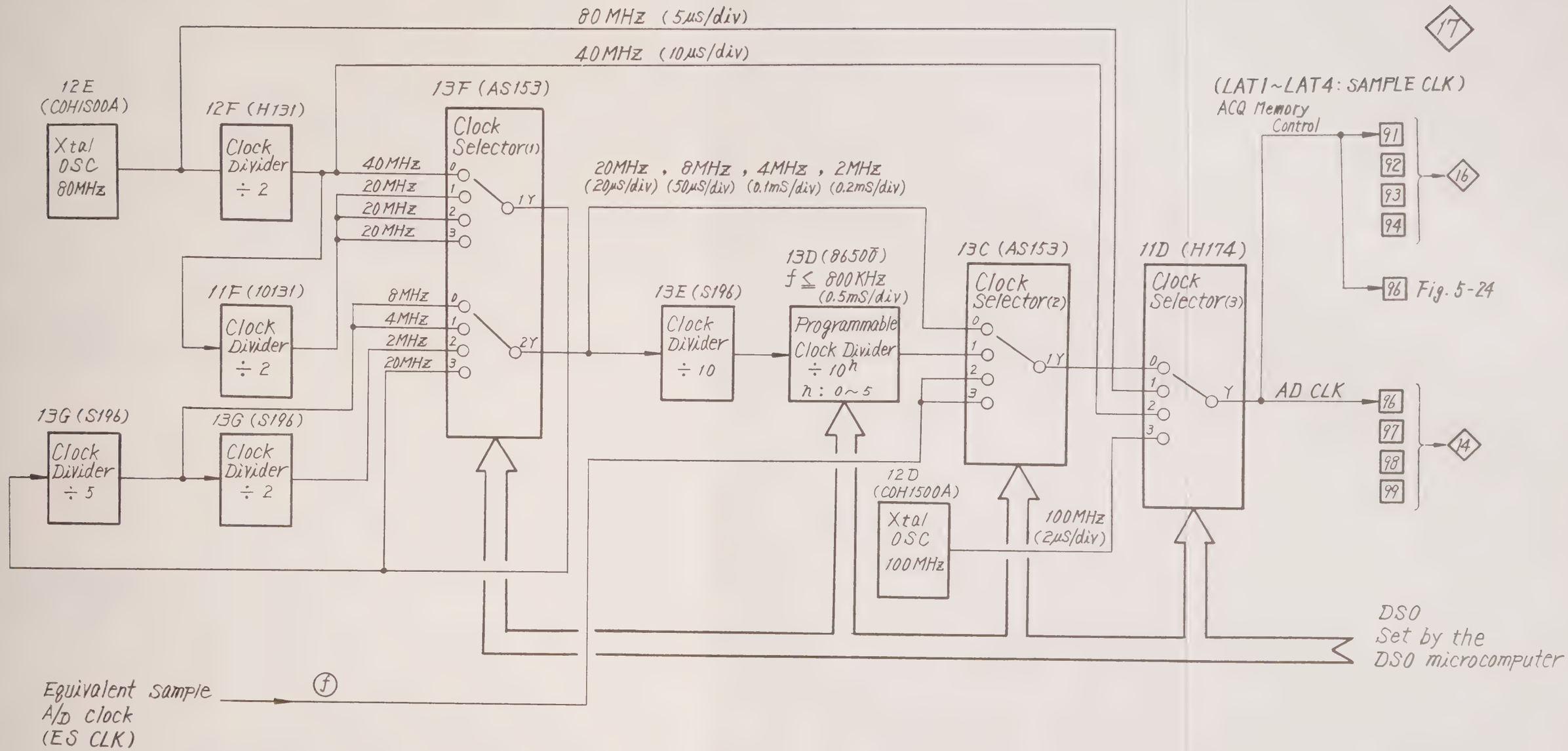

Fig. 5 - 21 TIME BACE CIRCUIT BLOCK DIAGRAM

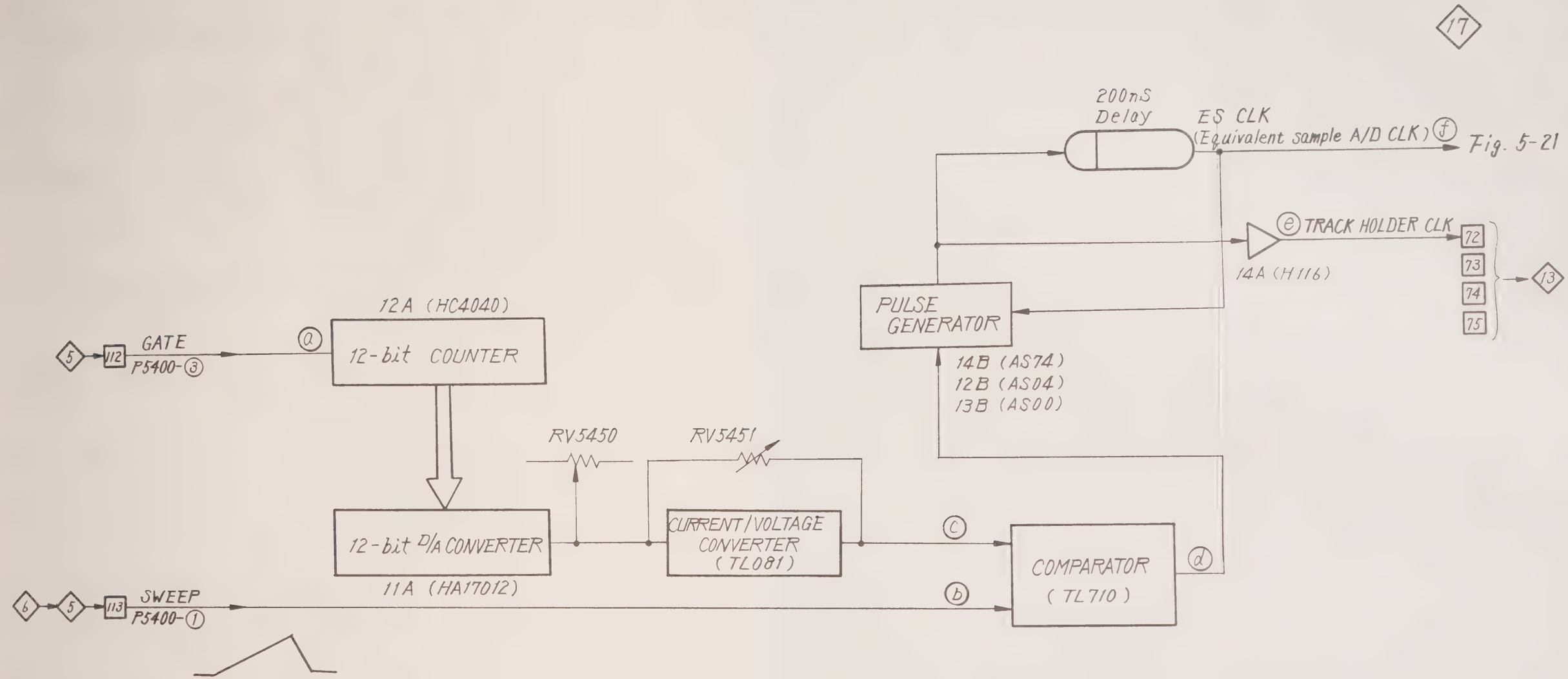

EQUIVALENT SAMPLE CLOCK
GENERATOR CIRCUIT
Fig. 5 - 22 BLOCK DIAGRAM

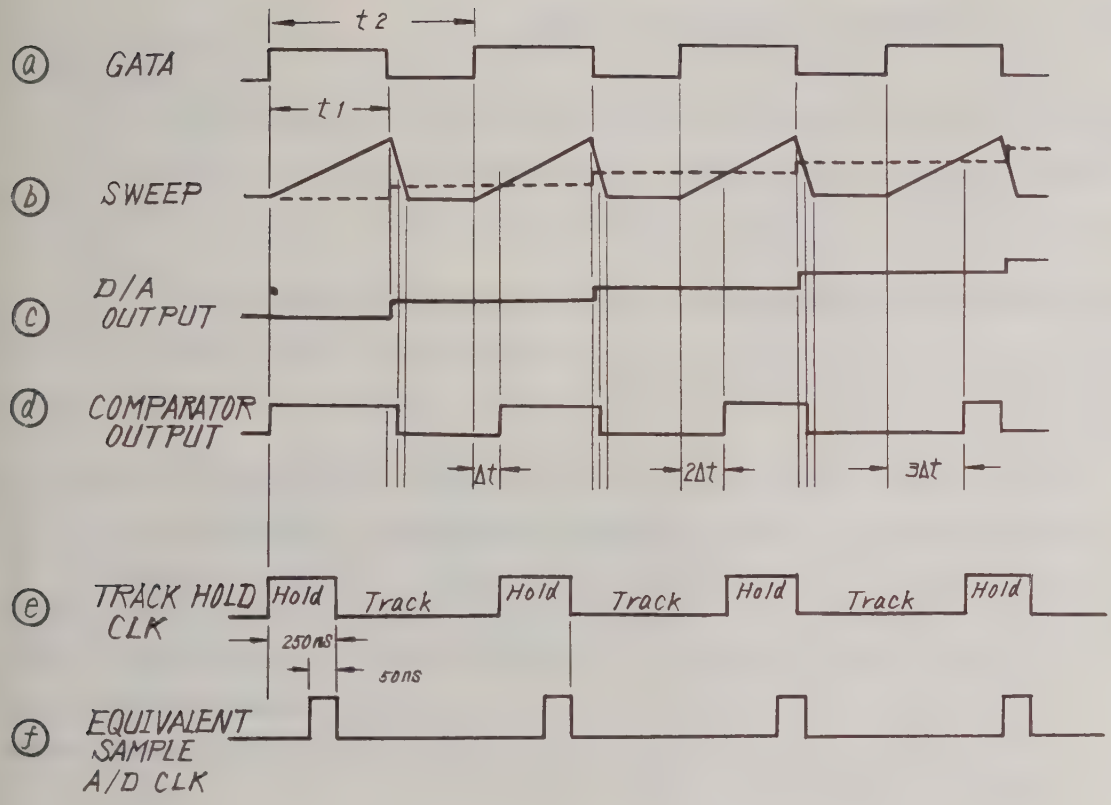

(1) $\Delta t = \frac{\text{TIME / DIV}}{400 \text{ / DIV}}$

(2) t_1 = depend on TIME/DIV range.

(3) t_2 = depend on input signal.

TIMING DIAGRAM OF
EQUIVALENT SAMPLE CLOCK
GENERATOR CIRCUIT

Fig. 5 - 23

5.18 ACQ MEMORY CONTROLLER (◇18◇)

Fig. 5-24 is a detailed block diagram of this circuit.
The major functions of this circuit are:

(1) Sampling period controller
(2) ACQ memory controller

The operating principle of each function follows.

(1) Sampling period controller

This controller controls the end of the sampling and the pretrigger. The number of data to be sampled until the sampling finishes after the trigger signal is detected is subject to the setting value of the pretrigger. The number of bytes per channel of the ACQ memory is 4096 (12 bits). Therefore, if the setting value of the pretrigger is m div, the number of data (N) to be sampled after the trigger signal is detected is as follows.

$$N = 4096 - 400 \times m$$

As the result, the waveform data of m div before trigger and the waveform data of (10-m) div after trigger are held in the ACQ memory. In other words, the waveform data corresponding to the preset pretrigger can be held.

Pretrigger setting is made as follows. When the PRETRIGGER mode is selected by the SELECTOR switch of the STORE MODE and the VARIABLES control is operated, the microcomputer detects the switch conditions and updates the data displayed on the CRT. The pretrigger amount thus established corresponds to m div and the number of pretrigger sampling, i.e. 400 x m, is set to the PRETRIGGER DATA LATCH.

The GATE pulse is generated in the SWEEP GEN circuit ◇5 from the trigger signal generated in the TRIG GEN circuit ◇4 . This GATE pulse is applied to the Gate Pulse Receiver from [97] via ◇17 . This signal, however, is neglected in this circuit unless the following conditions are satisfied.

(a) The STAND signal (IC9I, pin 12) of the Sampling Mode Data Latch should be high by the microcomputer as the start command of the sampling period of the waveform data. When sampling starts, the SAMPLING LED on the front panel is lit.

(b) A minimum of 4096 data should have been sampled after completion of the above setting. This is because it is needed to hold the data of the pretrigger section before the acquisition of the gate pulse becomes possible.

(c) The instrument should not be in the ROLL mode.
(In the ROLL mode, the trigger signal is not used.)

When the GATE pulse is applied after the above conditions was satisfied, the gate pulse receiver is synchronizsed with the latch LAT3, and detects the GATE pulse.
Then, the pulse which goes low for only one cycle of the LAT3 is output from pin8 of IC14C. With this pulse, the pretrigger set to the Pre Trigger Data Latch loads the number of sampling (m x 400)/4 onto the 12-bit binary counter consisting of IC14E, IC14F and IC14G in the Sampling Stop Controller. (This counter counts only 1/4 of the number of pretrigger sampling to count the SAMPLE CLK by the latch clock LAT3 devided by 4.) This counter counts up each time when one clock of the LAT3 is output from the value (m x 400)/4.

When the count reaches 1024, the sampling of one set of waveform data is completed and the output signal SAMPLE END-N from pin 6 of flip-flop IC14B. Then the SAMPLE END-N signal works so as to "end the write operation of the sampled data into the ACQUISITION memory" for the ACQ Memory Write Control circuit. Further, in order to inform the microcomputer of the end of sampling of one set of waveform data, the SAMPLE END-P signal goes high and this information is transferred to output DB_{0-7} of Data Driver circuit IC2J.

The computer system always monitors the SAMPLE END-P signal. When the microcomputer detects that this signal is high, the SAMPLING LED on the front panel which was lit when the Sampling Period Controller was driven goes off. After processing the other related procedures, the Sampling Mode Data Latch is cleared and one sampling process is completed.
In the ROLL mode, neither the Gate Pulse Receiver nor the Sampling Stop Controller operate and the SAMPLE CLOCK corresponding to the TIME/DIV setting is output.

(2) ACQ memory controller

This is the circuit "to produce the write clock to the ACQ memory and the write data" in order to write sampled data to the ACQ memory. The SAMPLE CLOCK from the Clock Syncronizer of ◇17◇ is applied to the Acquisition Clock Control section. When sampling starts, the microcomputer changes the SAMPLE signal on pin 2 of IC9I of the Sampling Mode Data Latch from a low level to a high level.

Thus the 4-bit shift resister IC9F in the Acquisition Clock Control is initialized and at the same time produced are

the four latch clocks LAT1-LAT4 which are produced by dividing the SAMPLE CLOCK by 4, synchronized with the SAMPLE CLOCK, and the phases of which are displaced by one cycle of the SAMPLE CLOCK each other. These four latch clocks LAT1-LAT4 distribute the sampled data to the 4-phase flip-flop circuit on the ACQ MEMORY circuit ◇16◇ in sequence and latch them. LAT3 is also applied to the ACQ Memory Write Control circuit and produces the signal $\overline{WE}$ which write data in the ACQ memory. The other IC's in the ACQ Memory Writes Control circuit produce the $\overline{OC}$ signal which enables the output of the above flip-flops, and the $\overline{CE}$ signal which enables the ACQ memory. These latch clocks $\overline{WE}$, $\overline{OC}$ and $\overline{CE}$ are sent to the ACQ Memory circuit section. Fig. 5-20 shows the timing diagram of these signals.

The Write Address Counter counts up one count each in synchronization with LAT3. The Write Address Counter is a circuit consisting of 12 bits and the lower 10 bits are output to the Data Selector.

In the Data Selector, the output of the Write Address Counter is selected and output from [106] and designates the write address of the ACQ memory. When it is needed to read the ACQ memory from the microcomputer while sampling is not executed, the read address (AB_{2-4}) from the MPU is selected. this selection is done by the control (ADDR SEL-P) from the MPU. The output data of the Write Address Counter is capable of reading data from the MPU via the Data Driver in order to inform the address of the ACQ memory to which the final data was written, the sampling of one waveform data is completed.

On the other hand, it is impossible to know from this address the triggered block of the ACQ memory. Therefore, the triggered block is monitored from the Trigger Point

Counter and the result is informed to the MPU by the A-AD0 and A-AD1 signals.

The Roll Interrupt Generator has an important role in the ROLL mode. In the ROLL mode, sampled data written in the ACQ memory is transferred to the display memory by the microcomputer in an interval before the next data is written. The ACQ memory is divided into the four blocks. When one sampled data is written in each block (4 data in total for the ACQ memory), the data is transferred to the display memory. The Roll Interrupt Generator is the circuit which generates the Roll mode interrupt signal in order to inform the microcomputer of the write timing. When the write pulse $\overline{WE}$ to the ACQ memroy goes high, the signal strikes pin 3 of flip-flop IC14I and let the interrupt signal $\overline{INTB}$ go low. The microcomputer detects this interrupt signal $\overline{INTB}$ and executes the corresponding process. Then, the $\overline{INTB}$ $\overline{CLK}$ pulse is generated from the MPU and at the same time the $\overline{INTB}$ signal goes high again.

The above operation is repeated each time when the $\overline{WE}$ signal is output as long as the Roll mode is holding.

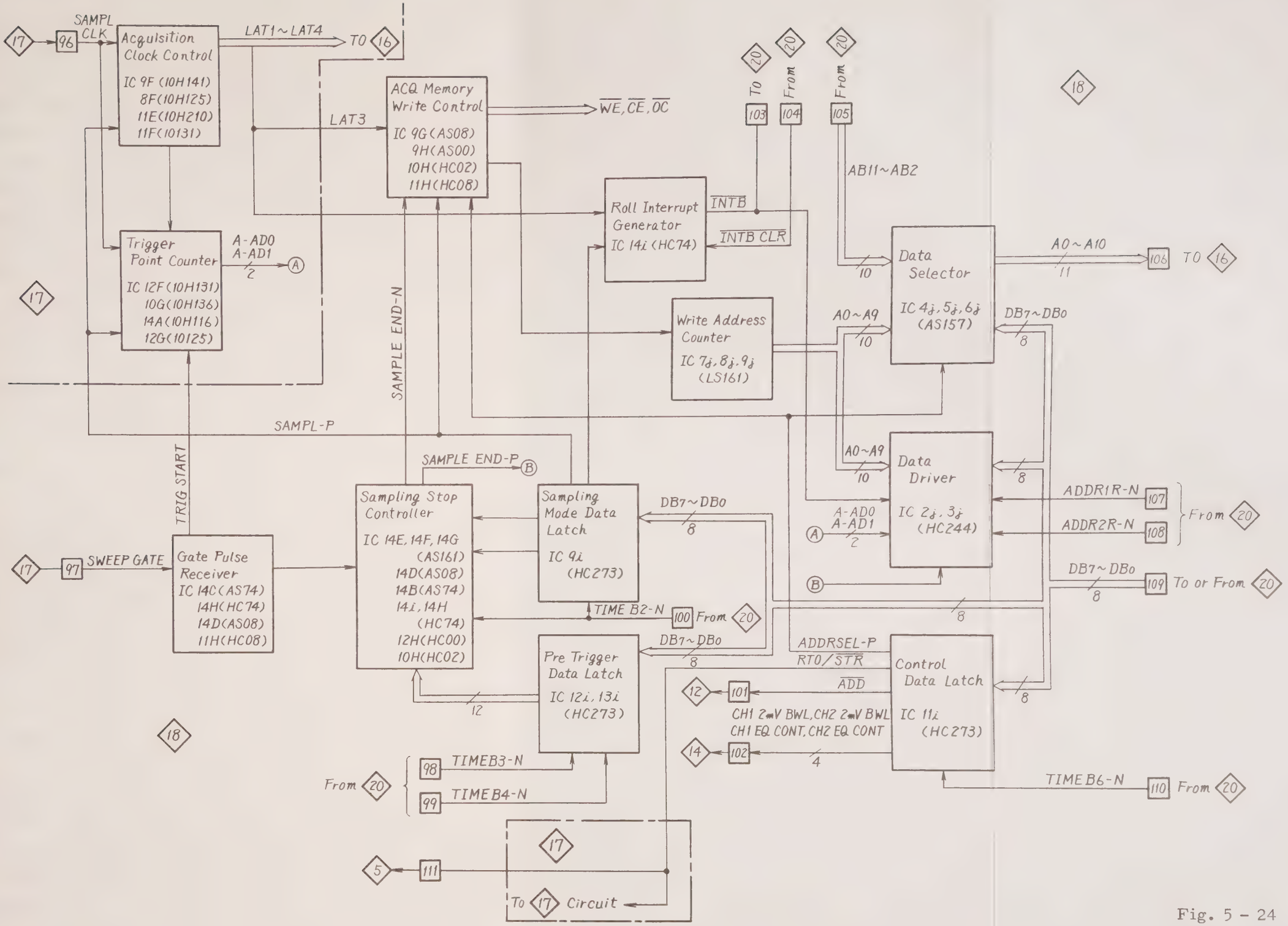
17
96
SAMPL CLK
Acquisition Clock Control
IC 9F (10H141)
8F(10H125)
11E(10H210)
11F(10131)
LAT1~LAT4
TO 16
LAT3
ACQ Memory Write Control
IC 9G(AS08)
9H(AS00)
10H(HC02)
11H(HC08)
WE, CE, OC
TO 20
103
FROM 20
104
FROM 20
105
18
Roll Interrupt Generator
IC 14i (HC74)
INTB
INTB CLR
AB11~AB2
Trigger Point Counter
IC 12F(10H131)
10G(10H136)
14A(10H116)
12G(10125)
A-AD0
A-AD1
2
A
17
SAMPLE END-N
Write Address Counter
IC 7j, 8j, 9j
(LS161)
A0~A9
10
Data Selector
IC 4j, 5j, 6j
(AS157)
DB7~DB0
8
A0~A10
11
106
TO 16
SAMPL-P
TRIG START
SAMPLE END-P
B
Sampling Stop Controller
IC 14E, 14F, 14G
(AS161)
14D(AS08)
14B(AS74)
14i, 14H
(HC74)
12H(HC00)
10H(HC02)
Sampling Mode Data Latch
IC 9i
(HC273)
DB7~DB0
8
A0~A9
10
Data Driver
IC 2j, 3j
(HC244)
8
ADDR1R-N
107
ADDR2R-N
108
FROM 20
A-AD0
A-AD1
2
A
B
DB7~DB0
109
To or From 20
17
97
SWEEP GATE
Gate Pulse Receiver
IC 14C(AS74)
14H(HC74)
14D(AS08)
11H(HC08)
TIME B2-N
100
FROM 20
DB7~DB0
8
Pre Trigger Data Latch
IC 12i, 13i
(HC273)
12
ADDRSEL-P
RTO/STR
ADD
101
12
Control Data Latch
IC 11i
(HC273)
CH1 2mV BWL, CH2 2mV BWL
CH1 EQ CONT, CH2 EQ CONT
14
102
4
18
FROM 20
98
TIMEB3-N
99
TIMEB4-N
TIMEB6-N
110
FROM 20
17
5
111
To 17 Circuit

Fig. 5 - 24

5.19 DIGITAL MPU (◇19◇)

Fig. 5-25 is a detailed block diagram of this circuit. This circuit is composed of MICRO PROCESSING UNIT (MPU), READ ONLY MEMORY (ROM), RAMDOM ACCESS MEMORY (RAM), system clock (4 MHz) OSCILLATOR for the MPU, ADDRESS DECODER, and driver circuits for signal lines including data bus, address bus and control signal. These circuits constitute a microcomputer system, which executes the fixed program written in the ROM. The microcomputer reads each data keyed-in from the front and rear panels, controls each internal circuit, processes sampled digital data, and controls data output processing such as GPIB and PLOT outputs for the external devices.
Table 5-5 shows the microcomputer system functions which are executed according to the program in the ROM.

MICRO PROCESSING UNIT (MPU)

μPD70008C which is compatible with Z80 is used as the MPU.
The MPU is clocked by 4 MHz system clock signal.
This MPU has three cycles as a basic function:

(1) Instruction operation code fetch cycle,
(2) Memory read/write cycle, and
(3) Input/output cycle.

In the system, two cycles (1) and (2) are only used.

(1) Instruction operation code fetch cycle

The stored address of the instruction which will be executed next in the ROM program is specified through the address bus (A141 to A0), and the instruction data is fetched by the MPU through the data bus (D7 to D0) and the data bus driver/receiver.

For the timing signal to fetch the instruction data, MREQ-N, RD-N, and M1-N signals are used, which are supplied from the CONTROL SIGNAL DRIVER.

(2) Memory read/write cycle

This cycle is executed when the data needs to be written to or read from other hardware circuits after performing the cycle (1).
The address which is assigned to hardware is specified through the address bus (A15 to A0), and the data is written or read through the data bus (D7 to D0).

In the write cycle, the DATA BUS DRIVER/RECEIVER is used as a data output circuit from the MPU to external circuits.
In the read cycle, the DATA BUS DRIVER/RECEIVER is used as a data input circuit from external circuits to the MPU.

Since all the circuits for read and write processing in this equipment are assigned to the memory address area, the memory read/write cycle is only used to read or write data from/to hardware.

The IORQ-N signal is connected to the CONTROL SIGNAL DRIVER and can be controlled in the gate circuit. However, this signal is for future use and not used in the instrument. The write timing is controlled by the MREQ-N and WR-N signals. Readout timing is controlled by the MREQ-N and RD-N signals.

Microprocessor interrupt operation

In this circuit only the maskable interrupt signal ($\overline{INT}$) is

used, and the non-maskable interrupt signal ($\overline{NMI}$) is not used.
There are four maskable interrupt signals:

(1) Storage processing start interrupt signal ($\overline{INT_O}$):

This interrupt signal makes the MPU start processing in the STORAGE mode when the NON STORE mode is switched to the STORAGE mode.
In the NON STORE mode the MPU is in the halt state.
(Refer to Item 3 in Table 5-5.)

(2) Digital blanking interrupt signal ($\overline{INT_S}$):

This interrupt signal informs that the DISPLAY MEMORY circuit is accessible from the MPU when the digital sweep enters the blanking period in the STORAGE mode.

(3) ROLL interrupt signal ($\overline{INT_B}$):

This interrupt signal informs that a new data acquisition is completed when every sampled data is stored to the ACQUISITION MEMORY circuit in the ROLL mode.

(4) GPIB interrupt signal (INT-N):

This interrupt signal commands the GPIB circuit (PEF-830) board ◇23◇ to start the GPIB processing when the external computer requests the GPIB transfer processing.

Interrupt signals (1) $\overline{INT_O}$ and (2) $\overline{INT_S}$ pass through the OR gate in the DISPLAY CONT circuit (PEF-826 board) ◇20◇ to be supplied to the MPU as one signal renamed $\overline{INT_O}$.
All the interrupt signals are OR'ed in the GATE circuit, and are supplied to pin 16 ($\overline{INT}$) of the MPU.

When the $\overline{INT}$ goes low, the MPU detects the interrupt signal. Then, the MPU reads the interrupt status data of each interrupt signal through the data bus (D7 to D0) to determine which interrupt signal occurs, and executes an processing. Interrupt priorities are decided by software.
$\overline{WAIT}$, $\overline{BUSRQ}$, $\overline{BUSACK}$, $\overline{RFS}$, and $\overline{HALT}$ signals are not used since the WAIT, the DMA, and the memory fresh functions, etc. are not used in this system.

READ ONLY MEMORY (ROM)

This ROM holds the data of the 32k bytes program which is executed by the MPU.

RANDOM ACCESS MEMORY (RAM)

This circuit is composed of two RAM's. The RAM's have memory capacity of 12k bytes. They are divided into three functional blocks: SAVE MEMORY A (4k bytes), SAVE MEMORY B (4k bytes), and WORKING MEMORY (4k bytes).

The SAVE MEMORY A and the SAVE MEMORY B are used to save the stored waveform data. When the SAVE CH1 A switch or the SAVE CH1 B switch on the front panel is pressed, the waveform data in the DISPLAY MEMORY for CH1 are saved to them. While, the SAVE MEMORY A and the SAVE MEMORY B are used to save the data under average operation in the AVERAGE mode. Therefore, when the AVERAGE mode is selected, the waveform data which have been saved in the RAM may be destroyed.
The WORKING MEMORY is a save area which saves data temporarily during program processing.

OSCILLATOR

The system clock signal (4 MHz) for the MPU is generated in this OSCILLATOR which has a ceramic resonator. The clock signal is also fed out from [115] to the GPIB circuit (PEF-830 board) ◇23◇ .

ADDRESS DECODER

The MPU needs to select the desired circuit to be accessed in order to write and read the data to/from each circuit. Then, each circuit has the address data which can be selected by the MPU. This ADDRESS DECODER decodes the address data, and produces the chip select signals to select the desired circuit. Table 5-6 shows the address assignment in the read and write circuits.

INITIAL RESET & BATTERY BACKUP CONTROLLER

This circuit consists of the INITIAL RESET circuit which feeds the $\overline{\text{RESET}}$ signal to the microcomputer system when power is on, and the BATTERY BACKUP CONTROL circuit which controls the save memory RAM and the working memory RAM when power is off.

INITIAL RESET CIRCUIT

The $\overline{\text{RESET}}$ signal is connected to the $\overline{\text{RESET}}$ (pin 26) of the MPU and is also connected to other circuits through the CONTROL SIGNAL circuit. When the signal level is low, all circuits in the MPU are reset.
When it goes high, the program starts at beginning.

When the $\overline{\text{RESET}}$ signal is supplied to other circuits, they are also reset and LED's on the front panel of the instrument light. This initial reset circuit supplies the $\overline{\text{RESET}}$ signal in the following cases:

(1) Immediately after the instrument is turned on.

(2) When the power source is momentarily cut, and the secondary power supply voltages (+5 V and 12 V) drop to the level at which the microcomputer system cannot normally operate.

When the power is turned on, +5 V is supplied to the micro-compuer system and digital circuits. However, the circuits do not start their operations simultaneouly after the voltage is supplied. If the MPU starts its operation when the circuits cannot operate normally yet, the MPU may abnormally operate. To avoid this abnormal operation, the $\overline{\text{RESET}}$ signal is supplied to the MPU to stop the MPU operation until the circuits can normally operate.

The source signal RESET-N of the $\overline{\text{RESET}}$ signal is produced by the μ-COM & ROM PG circuit ◇8◇, and applied to this circuit via pin P5705-10. When the supply voltage +12 V is applied to the μ-COM & ROM PG circuit and C2108 is charged via D2108 and R2107, the RESET-N signal goes high. The RESET-N is converted into the $\overline{\text{RESET}}$ signal via the 2-stage inverter HC04(IC-3G) and the $\overline{\text{RESET}}$ signal is fed to the microcomputer.
The power supplied to the μ-COM & ROM PG circuit ◇8◇ is produced by POWER 1, and the power supplied to the DIGITAL MPU ◇19◇ is produced by POWER 2. The two powers do not necessarily rise at the same time and a slight difference will be observed. If a sufficient power is supplied to the μ-COM & ROM PG circuit and the RESET-N signal goes high while a sufficient power is not supplied to the DIGITAL MPU, the $\overline{\text{RESET}}$ signal will go high immediately when a power is supplied to the DIGITAL MPU.

Therefore, the microprocessor will start to operate until all the powers of the DIGITAL circuit become stable.
To avoid this, the circuit consisting of TR5711 and TR5710 holds the $\overline{\text{RESET}}$ signal at a low level until the +5 V of the DIGITAL MPU becomes sufficiently high.
When the +5 V supply exceeds approximately 1.5 V while the +5 V of this circuit is rising, TR5700 becomes ON and the TR5700 collector (RESET-N signal) remains at a low level. If the +5 V rises further and exceeds approximately 4.7 V, TR5711 becomes ON and TR5711 collector becomes approximately zero volts. Then D5711 becomes ON and the anode voltage of D5711 becomes approximately 0.7 V. Consequently, TR5700 becomes off and the RESET-N is ready to go high.
Thus, when the power supply voltage of the DIGITAL section is in the range from +1.5 to 4.7 V, the $\overline{\text{RESET}}$ signal is maintained at a low level, and goes high after the voltage exceeds 4.7 V. Consequently, the microprocessor starts to operate stably.

BATTERY BACKUP circuit

The instrument is provided with the function to back up the save memory and the working memory. Therefore, the save waveform data and the measuring condition data can be held for approximately 72 hours. C5710 is a capacitor for backup use. The voltage charged in C5710 is fed to the power terminals of RAM's 1J and 1K via R5710 when power becomes off. This voltage is applied to the TR5712 base via R5710, R5711, R5712 and R5716, and the bias of TR5712 is inverted. TR5712 becomes off and the CE2 terminal of the RAM goes low. Therefore, the 2 RAM's are in the standby state and the written contents are stored.

On the other hand, TR5711 and TR5712 are ON, and the power of the RAM's is fed via TR5710 and D5710. C5710 is thus charged. The CF2 terminal of the RAM is held at a high level via TR5712 to enable the RAM to execute the normal read/write functions.

Data transfer between the microcomputers

The instrument has two microcomputers. One is the RTO microcomputer which controls the circuits for the NON STORE mode and the other is the DSO microcomputer which controls the circuits for the STORAGE mode.
Since the microcomputers accept different data such as information on switch settings, they need to obtain the other's data by data transfer between them.
When the TIME/DIV switch is changed, for example, the following operations are performed, and the sampling rate is switched.

① The RTO microcomputer reads the data of the TIME/DIV switch settings.
② The RTO microcomputer transfers the data to the DSO microcomputer.
③ The DSO microcomputer switches the sampling rate according to data.

The PIPO (parallel in parallel out) shift register 74HC299 (IC 1N) is provided between the two MPU's to transfer data.
The 8-bit DB7-0 can be read or written to this register from the digital side. When writing data in this register, the SHIFTLD goes low at the same time when the SLE-N goes low, and the CK signal is applied with the S1 terminal of this IC maintained at a low level to write data on DB7-0. When reading data, the contents of the internal register are output at the same time when TRDATA-N goes low and data is read.

On the other hand, data from the microcomputer of RT0 is read or written to this register bit-serially in sequence from the most significant bit. When writing data, data is loaded on the RxD line and strobed by the RSC signal to shift the data in the register. Data is thus written. When reading data, the gate IC1M (HC125) is enabled by the TSC signal to load data on the TxD line. At the same time, the content of the internal register is shifted by 1 bit to prepare data to be read next.

As discussed above, data from the microcomputers at both the sides is read and written alternately to this shift register, and the communication and transfer of data are performed.

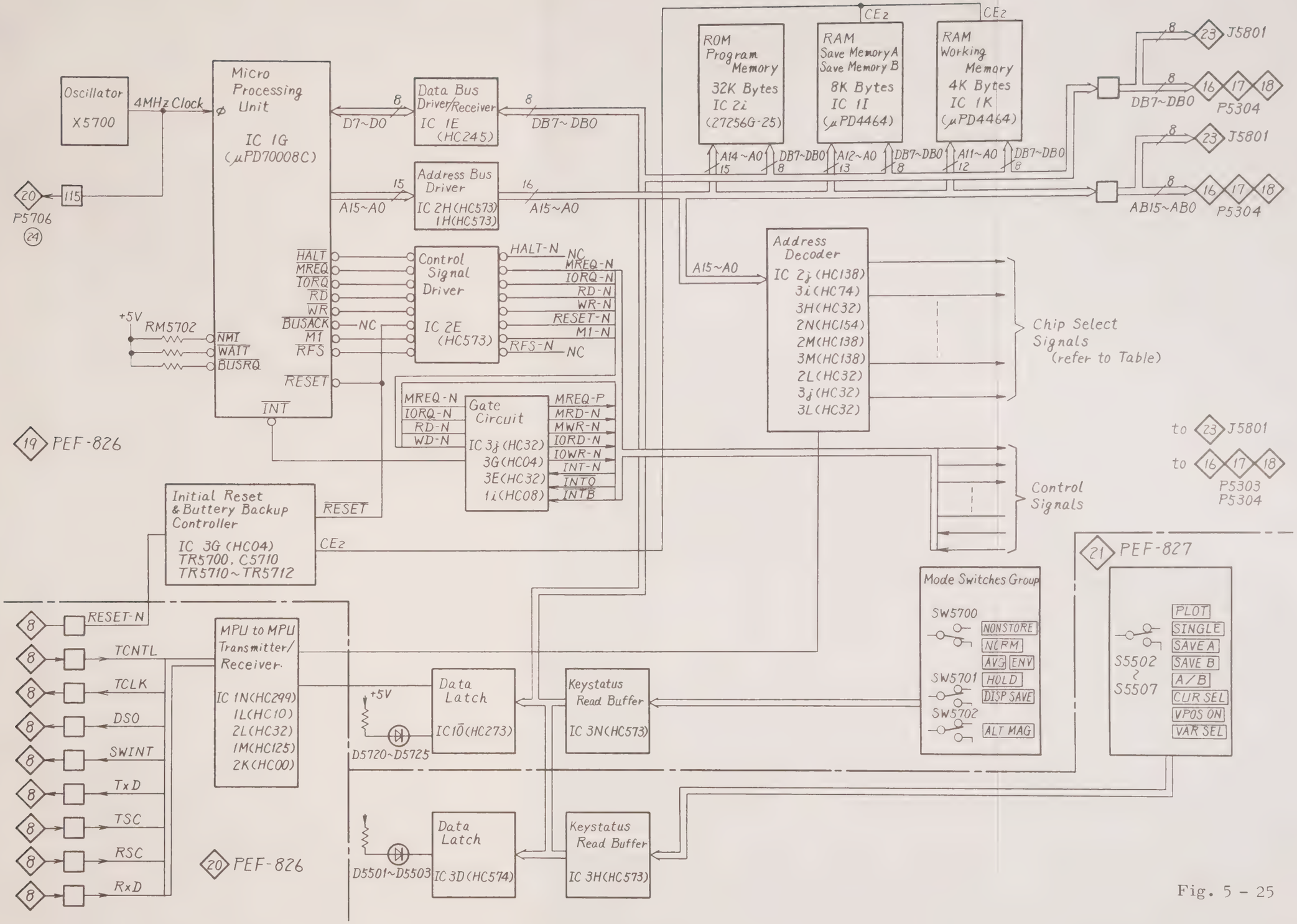
Oscillator
X5700
4MHz Clock
Micro Processing Unit
IC 1G (μPD70008C)
Data Bus Driver/Receiver
IC 1E (HC245)
D7~D0
DB7~DB0
Address Bus Driver
IC 2H(HC573) 1H(HC573)
A15~A0
ROM Program Memory
32K Bytes
IC 2i
(27256G-25)
RAM Save Memory A Save Memory B
8K Bytes
IC 1I
(μPD4464)
RAM Working Memory
4K Bytes
IC 1K
(μPD4464)
CE2
A14~A0
A12~A0
A11~A0
J5801
P5304
AB15~AB0
P5706
Control Signal Driver
IC 2E (HC573)
HALT
MREQ
IORQ
RD
WR
BUSACK
M1
RFS
RESET
INT
NMI
WAIT
BUSRQ
+5V
RM5702
HALT-N
MREQ-N
IORQ-N
RD-N
WR-N
RESET-N
M1-N
RFS-N
Address Decoder
IC 2j (HC138)
3i (HC74)
3H (HC32)
2N (HC154)
2M (HC138)
3M (HC138)
2L (HC32)
3j (HC32)
3L (HC32)
Chip Select Signals (refer to Table)
Gate Circuit
IC 3j (HC32)
3G (HC04)
3E (HC32)
1i (HC08)
MREQ-P
MRD-N
MWR-N
IORD-N
IOWR-N
INT-N
INTO
INTB
Control Signals
Initial Reset & Buttery Backup Controller
IC 3G (HC04)
TR5700, C5710
TR5710~TR5712
CE2
PEF-826
PEF-827
to J5801
to P5303 P5304
Mode Switches Group
SW5700
NONSTORE
NORM
AVG
ENV
SW5701
HOLD
DISP SAVE
SW5702
ALT MAG
S5502 ~ S5507
PLOT
SINGLE
SAVE A
SAVE B
A/B
CUR SEL
VPOS ON
VAR SEL
RESET-N
TCNTL
TCLK
DSO
SWINT
TxD
TSC
RSC
RxD
MPU to MPU Transmitter/ Receiver
IC 1N(HC299)
1L(HC10)
2L(HC32)
1M(HC125)
2K(HC00)
Data Latch
IC 1O (HC273)
D5720~D5725
Keystatus Read Buffer
IC 3N(HC573)
Data Latch
IC 3D (HC574)
D5501~D5503
Keystatus Read Buffer
IC 3H(HC573)

Fig. 5 - 25

Table 5-5 Mircrocomputer System Functions

No	Item	Processing	Hardware Functions	
			Input Data	Controlled Circuit
1.	Reading of panel setting data	* Reading of the setting data of the switch on the front panel * Reading of the setting data of the switches on the rear panel	o STORAGE MODE switches SW5700-SW5702 (PEF-826 ◇19) o DISPLAY mode switches S5500-D5507 (PEF-826 ◇21) o DATA OUTPUT CONT. switches S5871 - S5874 (PEF-831 ◇23) o GPIB ADDRESS switches S5870 (PEF-831 ◇23)	
2.	Status display	* On/off control of LED's		o STORAGE MODE LED's PRETRIGGER, NO. OF SWEEPS, MAG POINT STOR V POS CH1, STORE V POS CH2 SAMPLING, PLOT D5720 to D5725 (PEF-826 ◇19) D5503 (PEF-827 ◇21) o GPIB LED's D5501 to D5502 (PEF-827 ◇21)
3.	Control of the selected mode	* Controls the circuits to perform the operation corresponding to the mode selected by STORAGE MODE switches. * The MPU halts the control in the NON-STORE mode. * When the interrupt occurs in the NON-STORE mode, the microprocessor executes the program to control the corresponding items.	o STORAGE MODE switch SW5700 (PEF-826 ◇19) o Interrupt ($\overline{INTo}$) IC2B(HC74) (PEF-826 ◇20)	o Selection of signal to V switching circuit TR5000, TR5002, TR5012, T5020 TR5024, TR5060, TR5070, TR5074 (PEF-828 ◇12) o Selection of TIME BASE mode IC11I(HC273) (PEF-825 ◇17)
4.	Selection of the sampling clock	* Selection of the sampling clock which corresponds to the TIME/DIV switch.		o Control of clock selector IC10I(HC273) (PEF-825 ◇17)
5.	Start and stop of sampling operation	* The MPU controls the start and stop of the data sampling. * The number of data to be sampled after triggering is determined by the pre-trigger setting. This number is set in the TIME BASE. By this setting, the MPU controls the pretrigger sampling.	o Setting of PRETRIGGER control	o Control of data latch control IC9I(HC273) (PEF-825 ◇18) o Pretrigger data latch IC12I,IC13I(HC273) (PEF-825 ◇18) o Sampling LED D5723 (PEF-826 ◇19)

No	Item	Processing	Hardware Functions	
			Input Data	Controlled Circuit
6.	Transfer, and display of stored data	* Rewrites the data for display memory whenever the sampling of the 4000 data for each channel completes (in the NORM STORAGE mode). * Displays and moves the cursors for CURSOR, MAG POINT, and PRETRIGGER. (Except the Roll mode.)	o Status of ACQUISITION MEMORY IC3J(HC244), IC2J(HC244) (PEF-825 ◇18◇) o Timing of Digital Sweep Blanking (interrupt $\overline{INTs}$) IC2C (HC563) (PEF-826 ◇20◇)	o Display Memory controller IC2E(68A45P) (PEF-827 ◇21◇) o Display CH Data latch IC3G(HC273) (PEF-827 ◇21◇) o Display start address data latch IC2D (HC574) (PEF-826 ◇20◇)
7.	Transfer and display of the data in the ROLL mode	* Transfers the data from the acquisition memory to the working memory to store them temporally whenever interrupt ($\overline{INT_B}$) occurs at writing new data in the acquisition memory. * Then, the MPU transfers the data stored in working memory to the display memory, synchronized with blanking signal (interrupt $\overline{INTs}$) of digital sweep. After that, the MPU updates the display start address. * The MPU will continue to transfer newer data until the ROLL mode is released.	o ROLL interrupt ($\overline{INT_B}$) IC14I (HC74) (PEF-825 ◇18◇) o Status of ACQUISITION MEMORY IC3J(HC244), IC2J(HC244) (PEF-825 ◇18◇) o Timing of Digital Sweep Blanking IC2C (HC563) (PEF-826 ◇20◇)	o Display Memory controller IC2E (68A45P) (PEF-827 ◇21◇) o Display start address data latch IC2D (HC574) (PEF-826 ◇20◇)
8.	Arithmetic of AVERAGE mode	* The MPU acquires the sampled data which is added by the selected times with the NO. OF SWEEPS, then the MPU averages the acquired data.	o Setting of NO. OF SWEEPS	
9.	Operation of SINGLE mode process	* When detecting that the SINGLE switch is pressed in the HOLD mode, the MPU operates a series of SINGLE mode processing; start and stop of the sampling (see Item 5), and control of transfer, and display of the sampled data (see Item 6). Until the processing is completed, the MPU allows the PLOT LED to light.	o STORAGE MODE switch [SINGLE] S5503 (PEF-827 ◇21◇) o Status of ACQUISITION MEMORY IC3J(HC244), IC3J(HC244) (PEF-825 ◇18◇) o Timing of Digital Sweep Blanking (interrupt $\overline{INTs}$) IC2C(HC563) (PEF-826 ◇20◇)	o STORAGE MODE LED [PLOT] D5503 (PEF-827 ◇21◇)
10.	Processing of data saving	* After the MPU detects that the SAVE switch is pressed in the HOLD mode, the MPU transfers the data from the CH1 display memory to the save memories. During the data transfer, the MPU will allow the PLOT LED to light. * Whenever the DISP SAVE switch is set to ON, the MPU exchanges the data between the selected SAVE memory and the CH2 display memory.	o STORAGE MODE switch [SAVE CH1 A] , [SAVE CH1 B] S5504, S5505 (PEF-827 ◇21◇) o Display of SAVE MEMORY switches [DISP SAVE] [▮A ▂B] SW5701 (PEF-826 ◇19◇) S5506 (PEF-827 ◇21◇)	o STORAGE MODE LED [PLOT] D5503 (PEF-827 ◇21◇)

No	Item	Processing	Hardware Functions	
			Input Data	Controlled Circuit
11	Interface with the RTO microcomputer	* Receives the panel setting data including TIME/DIV, V/DIV and cursor measurement which the RTO microcomputer reads. * Transmits the data measured in the STORAGE MODE to the RTO microcomputer.	o Reception data from the RTO microcomputer. IC1N (HC299) (PEF-826 ◇20◇)	o Transmission data to the RTO microcomputer. IC1N (HC299) (PEF-826 ◇20◇)
12	PLOT OUTPUT control	* When the PLOT switch is pressed in the HOLD mode, the MPU feeds out either the data stored in the display memory of the channel selected by the V.MODE switch or the sawtooth waveform data for the X-axis sweeping, according to the DATA OUTPUT CONT. setting.	o Storage Mode [PLOT] switch S5502 (PEF-827 ◇26◇) o DATA OUTPUT CONT switches S5871 to S5874 (PEF-830 ◇23◇)	o PLOTOUT CONTROLLER IC7801 (8255) (PEF-830 ◇23◇) o STORAGE MODE LED [PLOT] D5503 (PEF-827 ◇21◇)
13	GPIB control	* Controls the GPIB processing or the digital PLOTOUT processing. The GPIB processing program can be active in the HOLD mode. According to the GPIB program, the MPU processes the command data from the external computer and responds to the Data Send Request. While the MPU executes the GPIB processing, the BUSY LED will light.	o GPIB address switch S5870 (PEF-831 ◇23◇)	o BUSY LED D5501,D5502 (PEF-827 ◇21◇) o GPIB controller IC5802 (9914) (PEF-830 ◇23◇)

Table 5-6 Address Assignments for the MPU Read / Write Circuit

Address (HPX.)	Circuit	Schem. diag.	Board	IC coordinates	READ/WRITE	Chip select signal
0000 to 7FFF	ROM PROGRAM MEMORY	19	PEF-826	2I	READ	A15-N
8000 to 9FFF	RAM SAVE MEMORY A RAM SAVE MEMORY B	19	PEF-826	1J	READ/WRITE	RAM0-N
A000 to AFFF	RAM WORKING MEMORY	19	PEF-826	1K	READ/WRITE	RAM1-N
B000 to CFFF	DISPLAY MEMORY	21	PEF-827	1F, 3F	READ/WRITE	CH1 DISP-N CH2 DISP-N
D000 to EFFF	ACQUISITION MEMORY	16	PEF-825	1H to 8H	READ	CH1 ACQ-N CH2 ACQ-N
F000 to FF8F	(Not used)					
FF90 to FF97		20	PEF-826	1D	CONTROL	$\overline{\text{INT S CLR}}$
FF98 to FF9F		20	PEF-826	2D	WRITE	DISP STADR-N
FFA0 to FFA7		21	PEF-827	3D	WRITE	INT FA-N
FFA8	DATA DRIVER (of ACQUISITION MEMORY WRITE ADDRESS)	18	PEF-825	3J	READ	ADDR1R-N
FFA9				2J		ADDR2R-N
FFAA	MPU to MPU TRANSMITTER/ RECEIVER	20	PEF-826	1N	CONTROL	SHIFTLD SLE-N
FFAB	A/D CONTROL DATA LATCH	18	PEF-825	11I	WRITE	TIMEB6-N
FFAC	DATA LATCH	19	PEF-826	1O	WRITE	LEDG-N
FFAD	STORAGE INTERRUPT GENERATOR	20	PEF-826	2B	CONTROL	INT 0 CLR
FFAE	KEYSTATUS READ BUFFER	19	PEF-826	3N	READ	KEYSTBU-N
FFAF	MPU to MPU TRANSMITTER/ RECEIVER	20	PEF-826	1N	READ	TRDATA-N

Address (HEX.)	Circuit	Schem. diag.	Board	IC coordinates	READ/WRITE	Chip select signal
FFB0	SAMPLE CLOCK SELECT DATA LATCH	17	PEF-825	10I	WRITE	TIMEB1-N
FFB1	SAMPLE MODE DATA LATCH	18	PEF-825	9I	WRITE	TIMEB2-N
FFB2	PRETRIGGER DATA LATCH	18	PEF-825	13I	WRITE	TIMEB3-N
FFB3				12I		TIMEB4-N
FFB4	SAMPLE MODE DATA LATCH	18	PEF-825	9I	CONTROL	TIMEB5-N
FFB5	ROLL INTERRUPT GENERATOR	18	PEF-825	14I	CONTROL	INT B CLR-N
FFB6	CH1/CH2 SELECTOR for MEMORY	19	PEF-826	3I	WRITE	MEMSEL-N
FFB7	STORAGE V-POS CONTROLLER	21	PEF-827	3J	WRITE	VPOSLA-N
FFB8 to FFBF	STORAGE SWEEP CONTROLLER	20	PEF-826	2C	READ	SWEENST-N
		21	PEF-827	3G	WRITE	DISP MODE-N
FFC0 to FFC7	DISPLAY CONTROLLER	21	PEF-827	2E	WRITE	CRTCD-N
FFC8 to FFCF	KEY STATUS READ CONTROLLER	21	PEF-827	3H	READ	KEYSTAT-N
FFD0 to FFDF	(Not used)					
FFE0 to FFE7	PLOTOUT MODE SW	23	PEF-830	IC5806	READ	OUT STAT-N
FFE8 to FFEF	PLOTOUT CONTROLLER	23	PEF-830	IC7801	WRITE	REC-N
FFF0 to FFF8	GPIB ADDRESS READ CIRCUIT	23	PEF-830	IC5805	READ	GPIBR-N
FFF8 to FFFF	GPIB CONTROLLER	23	PEF-830	IC5802	READ/WRITE	GPIB-N

5.20 DISPLAY (◇20 , ◇21 , ◇22)

This circuit produces the final waveform signal to display the waveform data stored in the STORAGE mode on the CRT and the sweep control signal of the CRT.
Fig. 5-26 is a detailed block diagram of this circuit.
Display memories for CH1 and CH2 have a memory capacity of 4k bytes each. Display memory for CH1 consists of IC3F and that for CH2 consists of IC1F. In the STORAGE mode, the waveform data stored in the display memories are synchronized with the storage sweep signal which is repeatedly generated by the sawtooth generator in the circuit ◇22 and read out.
The readout data is converted from a digital signal to an analog signal by the DA converters and used as a source signal of the horizontal or vertical deflection signal for the CRT. The STORAGE-X signal from [116] enters the H. OUT AMP of the circuit ◇8 through the circuit ◇9 . The STR-Y signal from [117] enters the V. OUT AMP of the circuit ◇3 through the circuit ◇9. The waveform corresponding to the storage data is displayed on the CRT.

The readout functions are described below. (See Fig. 5-27.)
The readout operation of the display memories is mainly controlled by CRT CONTROLLER IC3N. IC3N (LSI) feeds out the V. SYNC signal with a cycle of approximately 7 ms. The V. SYNC signal is passed to the Digital Sweep Timing Controller and used as a timing pulse, and the $\overline{\text{STORAGE SWEEP GATE}}$ signal is fed out from pin 9 of IC1J in the Digital Sweep Timing Controller.
The high level period (62 ms approx.) of the $\overline{\text{STORAGE SWEEP GATE}}$ signal corresponds to the blanking period and the low level period (0.8 ms approx.) to the sweep period.
The $\overline{\text{STORAGE SWEEP GATE}}$ signal is controlled by the Digital

Sweep Timing Controller so that the gate signal level changes from low to high, delayed from the V. SYNC signal.
The horizontal period (6.2 ms approx.) of the STORAGE SWEEP GATE signal is set by the time constant of monostable-multivibrator IC5N (2/2).

Next, the flow of the data written in the display memory which becomes a storage Y signal is discussed below. (Before storage-CHR SEL)
The CK signal is applied to the CRT controller (3E) during the sweep period and the DISP TMG pulse is fed out. The data which determines the readout address of the display memory is output to the read address bus from each terminal of MA0-6 and RA0-4 of the CRT controller, synchronized with the DISP TMG pulse.
This address is counted from 0 to 4000 and fed to the display memory. Then the storage Y data of CH1 and CH2 is output. In the modes other than X-Y, the selector (IC1C, 3I) selects the CH1 display data for the CH1 display and the CH2 display data for the CH2 display, and the analog storage Y signal is fed out by the D/A converter. When the CH1/CH2 SEL signal goes high, CH1 is selected. When the signal goes low, CH2 is selected.
When the STORAGE V POS is on, offset is added to the storage Y signal by the STORAGE V POS circuit to control the movement of the vertical position.
The flow from the generation of the storage sweep to the input to the SWEEP-X-Y SEL is discussed below.

The CK signal is applied to the CK divider during the sweep period, and an appropriate CK signal is applied to the counter and DAC. Then a stairstep signal corresponding to 0-4000 is fed out.
When the counter indicates 4000, the signal indicating the completion of sweep is applied to the digital sweep timing controller. In the modes other than X-Y, the output of the

display memory CH1 is applied to the STORAGE-CHR SEL via the D/A converter for the storage X-Y signal. When the X-Y control is low, the X-Y mode is selected.
The STORAGE X and Y signals become the composite signal of the storage signal and the character signal. When characters are generated, this circuit becomes a character priority circuit which outputs characters.

Next, the magnified display function is discussed. There are two methods. One is to change the set value of CRTC (2E) and the other to change the CK of the STORAGE SWEEP.
The former is the method which changes the DISP TMG time by changing the set value by the microcomputer. Normally the time is 1 μs. By changing the time to 10 μs, a waveform is observed as if a x10 waveform is displayed.
The latter is the method to speed up the SWEEP CK which is normally 1 μs. When the SWEEP CK is 250 ns, the SWEEP time is reduced to 1/4 and a waveform is observed as if a x4 waveform is displayed.

The magnification is performed by the combination of the two methods. The combination is listed in Table 5-7.

Table 5-7

Magnification	CRTC	SWEEP CK
x2	x1	x2
x2.5	x1.25	x2
x4	x2	x2
x5	x2.5	x2
x10	x5	x2
x20	x5	x4
x25	x6.25	x4
x40	x10	x4
x50	x12.5	x4
x100	x25	x4

Note: The setting of CRTC is performed by software via the microcomputer. Refer to the following Table for the SWEEP CK.

	◇20 PEF-826 2D	
	Pin ⑬	Pin ⑭
x1	L	L
x2	L	H
x4	H	H

Writing of data in the DISPLAY memory

When the DISPLAY MEMORY CH1 is not in the period of reading data to the display waveform, the ADDRESS SELECTOR FOR CH1 (2B, 2G and 2C) selects the address bus (AB0-11) and the DATA BUS DRIVER/RECEIVER IC3E becomes active by the command from the microcomputer to allow the data bus and the DISPLAY MEMORY's to be connected.

When the DISPLAY MEMRORY CH2 is not in the period reading data to the display waveform, the ADDRESS SELECTOR FOR CH2 selects the address bus (AB0-11) and the DATA BUS DRIVER/ RECEIVER IC3F becomes active by the command from the microcomputer to allow the data bus and the DISPLAY MEMEORY's to be connected.
During the period while data is not being read from a display memory, the microcomputer designates the write-in address for the display memory into the address bus, and sets the write data at the IO port of a display memory via the DATA BUS DRIVER/RECEIVER. Thus, the new waveform data is written in the display memory.
The microcomputer judges whether or not the display memory is in the waveform display period by detecting the voltage on the pins 2 and 4 (◇20◇ PEF-826) of DISPLAY CH DATA LATCH IC2C.
Then, the DIGITAL SWEEP TIMING CONTROLLER feeds the status signals (CH1/$\overline{CH2}$ signal, and INT's signal fed from pin 5 of IC5M.)

Major input/output signals:

(1) $\overline{\text{STORAGE SWEEP GATE}}$:
The signal is low during the sweep period in the STORAGE mode and high during the blanking period.

(2) CH1/$\overline{CH2}$ (output signal fed from pin 11 of IC1I):
The signal selects the DISPLAY MEMORY FOR CH1 (IC3F) or the DISPLAY MEMORY FOR CH2 (IC's 2H and 2I).
The signal goes high when the microcomputer gains access to a memory.

(3) Pin 5 of IC3C (◇25◇)
H: Storage mode
L: Oscilloscope mode

(4) MREQ-P (Memory REQuest):
The signal goes high when the microcomputer gains access to a memory.

(5) CRTCD-N (CRT Controller Device):
The signal goes low when writing and reading data from the CRT CONTROLLER.

(6) DISP MODE-N:
The signal goes low when writing data in IC3G of the microcomputer.

(7) $\overline{\text{INTs}}$:
The signal goes low when the display starts (at the starting point of the sawtooth wave), and interrupts the microcomputer.

Note: The microcomputer is held when the microcomputer is not interrupted.
Consequently, interruption is required to activate the microcomputer.

(8) INT_0 ST:
The signal goes high when the mode is changed from NON STORE to STORAGE.
The signal is read by the microcomputer via IC3P.
(PEF-826 ◇20◇)

(9) $\overline{\text{INTs}}$ CLR:
The signal is the reset signal of the $\overline{\text{INTs}}$. When the signal is low, the $\overline{\text{INTs}}$ signal goes high and releases the interruption. (PEF-826 ◇20◇)

(10) SWEENST-N (SWEEp Number STatus):
When this signal is low, the microcomputer can read the status of the display memory via IC2C. (PEF-826 ◇20◇)

(11) DISPSTADR-N (DISPlay STart ADdRess):
When the signal is low, the microcomputer updates the display memory address in IC2D (PEF-826 ◇20◇)

Note: The display starts from zero address of the display memory in the normal STORAGE mode. However, in the ROLL mode, the address from which the display starts is not determined. So, the microcomputer is designed to control the address for the display starting point.

In other words, after the microcomputer calculates the address at the starting point, it writes the resultant address in IC4P.

Fig. 5-28 is a timing diagram of the CH1 sweep waveform, the CH2 sweep waveform, the STR-Y signal, the CH1/$\overline{\text{CH2}}$ signal, and the STR-FS signal.

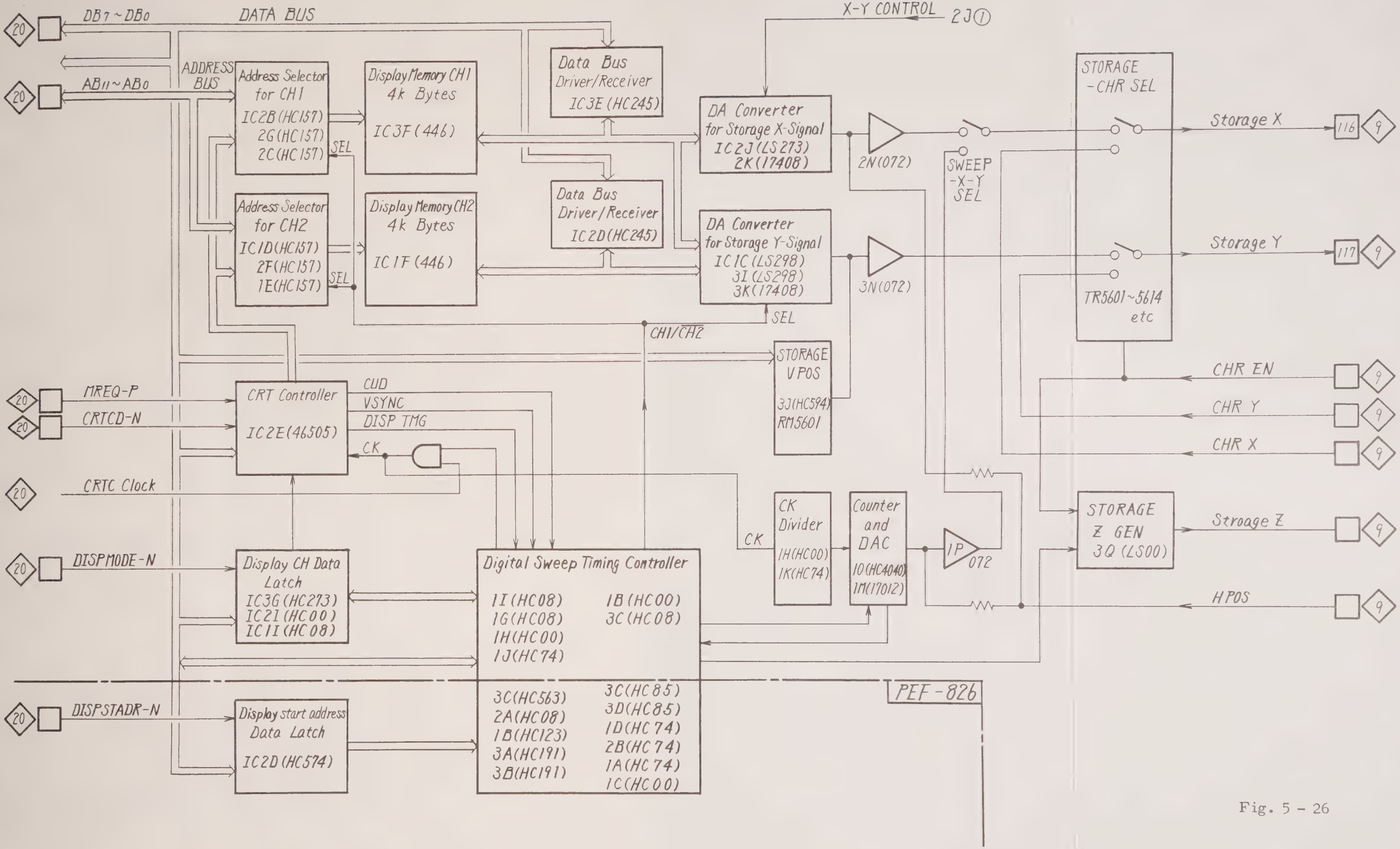
DB7~DB0
DATA BUS
X-Y CONTROL
2J①
AB11~AB0
ADDRESS BUS
Address Selector for CH1
IC2B(HC157)
2G(HC157)
2C(HC157)
SEL
Display Memory CH1
4k Bytes
IC3F(446)
Data Bus Driver/Receiver
IC3E(HC245)
DA Converter for Storage X-Signal
IC2J(LS273)
2K(17408)
2N(072)
SWEEP -X-Y SEL
STORAGE -CHR SEL
Storage X
116
9
Address Selector for CH2
IC1D(HC157)
2F(HC157)
1E(HC157)
SEL
Display Memory CH2
4k Bytes
IC1F(446)
Data Bus Driver/Receiver
IC2D(HC245)
DA Converter for Storage Y-Signal
IC1C(LS298)
3I(LS298)
3K(17408)
3N(072)
Storage Y
117
9
SEL
CH1/CH2
TR5601~5614 etc
STORAGE V POS
3J(HC594)
RM5601
MREQ-P
CRTCD-N
CRT Controller
IC2E(46505)
CUD
VSYNC
DISP TMG
CK
CHR EN
CHR Y
CHR X
CRTC Clock
CK Divider
1H(HC00)
1K(HC74)
Counter and DAC
1O(HC4040)
1M(17012)
1P 072
STORAGE Z GEN
3Q(LS00)
Stroage Z
DISPMODE-N
Display CH Data Latch
IC3G(HC273)
IC2I(HC00)
IC1I(HC08)
Digital Sweep Timing Controller
1I(HC08)
1G(HC08)
1H(HC00)
1J(HC74)
1B(HC00)
3C(HC08)
HPOS
3C(HC563)
2A(HC08)
1B(HC123)
3A(HC191)
3B(HC191)
3C(HC85)
3D(HC85)
1D(HC74)
2B(HC74)
1A(HC74)
1C(HC00)
DISPSTADR-N
Display start address Data Latch
IC2D(HC574)
PEF-826

Fig. 5 - 26

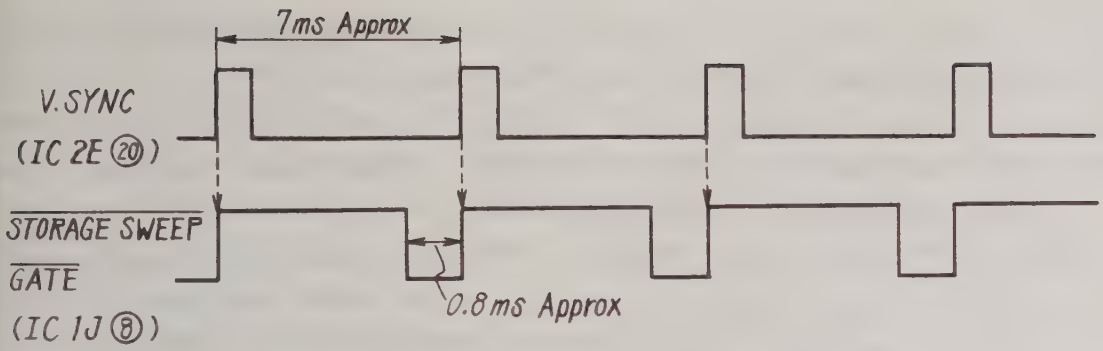

Fig. 5 - 27

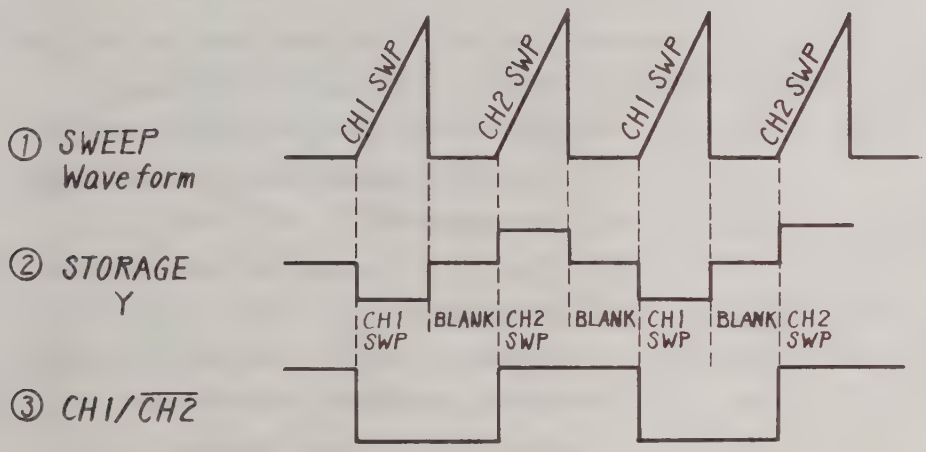

Fig. 5 - 28

5.21 GPIB, PLOT I/F AND ILLUM (◇23◇)

See the schematic diagram.

(1) GPIB

ADDRESS switch S5870 on the rear panel is used to set the GPIB address of the instrument. The DIGITAL MPU built in the instrument reads the address of the instrument itself (set by S5870) via buffer circuit IC5805 when the power is on. If the setting value of the address needs to be changed, turn off the power, and initialize.

LSI IC5802 (9914) exclusive for the GPIB operates as the interface between the GPIB and the DIGITAL MPU.
At this time, IC5082 (9941) works according to the IEEE 488 protocol instead of the DIGITAL MPU. Therefore the operation of the DIGITAL MPU is reducead.
IC5803 (75160) and IC5804 (75161) are bidirectional transceivers and operate as the interfaces between IC5802 (9914) and the GPIB. For details, refer to the IEEE Standard 488-1975/78 (Sectiton 10 in the operation manual).

Note 1: The devices connected via the GPIB are as follows.

a) Controller: Controls the entire system.

b) Listener: Receives data from other devices.
- o Plural listeners in the system are acceptable.
- o Plural listeners can operate simultaneously.

c) Talker: Transmits data to other devices.
Plural talkers cannot operate simultaneously in one system.

Note 2: Signals and operations of the GPIB line

a) DAV (DAta Valid)

b) NRFD (Not Ready For Data)
When NRFD is high, all the assigned listeners are ready to receive the data on the data bus.
If any of the listeners is not ready to receive the data, NRFD is low.

c) NDAC (Not Data ACcepted)
When all the assigned listeners have accepted the data, NDAC is high. If any of the listeners has not completed the acceptance, NDAC is low.

d) IFC (Interface Clear)
Sent from the controller to clear the interface of each device.

e) ATN (ATteNtion)
Sent from the controller to indicate the mode of the input and output data.
In case of the command mode, address information and command information are alternately sent.
In the data mode, transmission and reception data is sent.

f) SRQ (Service ReQuest)
A talker can use this SRQ with a low level to request the controller's attention.

g) REN (Remote ENable)
The controller sends this REN which should be monitored by the remote-controlled devices.

h) EOI (End Or Identify)
Used to indicate the end of a data-transfer sequence.
The specified talker acts to send the last data to the data input/output line during the ATN high period. EOI turns to low upon completion of the last data transmission.

i) DIO1 to DIO8 (Data Input Output)
The address data, the command, and the transmission/reception data are sent through DIO1 to DIO8.

(2) PLOT I/F

Fig. 5-29 is a block diagram of the BACK BOARD and PLOT OUTPUT CONT (2) circuits.
The data set by the DATA OUTPUT CONT switches on the rear panel is read by the microcomputer. The stored data is fed to the PIO (IC7801) according to the setting data (output speed, and Y-T or X-Y mode.)

The data from the PIO is passed to the DA converter's (IC7802 and IC7803), where the data is converted to an analog signal. The analog signal is fed out through the PLOT OUTPUT connectors on the rear panel.

a) Y-T mode
When the MODE switch of DATA OUTPUT CONT is set to the Y-T mode (▮), the stored data of the CH1 and the CH2 are set at the PA and PB outputs of the PIO, respectively. So, the analog data of the CH1 and CH2 stored waveforms are fed out through the PLOT OUTPUT CH1 and CH2 connectors, respectively.

b) X-Y mode
When the MODE switch of DATA OUTPUT CONT is set to the X-Y mode (▬), the stored data of the CH1 or CH2 is set at the PA output of the PIO. So, the analog data of the CH1 or CH2 stored waveform is fed out through the PLOT OUTPUT (CH1 or Y) connector on the rear panel.
The increment data is set at the PB and PC outputs of the PIO in sequence from "0" through the microcomputer, and the resultant sawtooth wave is fed through the PLOT OUTPUT (CH2 or X) connector.
The reference voltage of the D/A converters is 6 V, which is produced from 12 V by shunt regulator IC5807.

(3) ILLUM

The 12 V power supply for the ventilating fan is commonly used to illuminate the ILLUM lamp on the front panel.
The emitter current of TR5852 is supplied to the lamp by the 12 V supply.
The base voltage of TR5851 is changed by the ILLUM control. The emitter current of TR5852 is thus controlled.
The 12 V is directly applied to the ventilating fan.

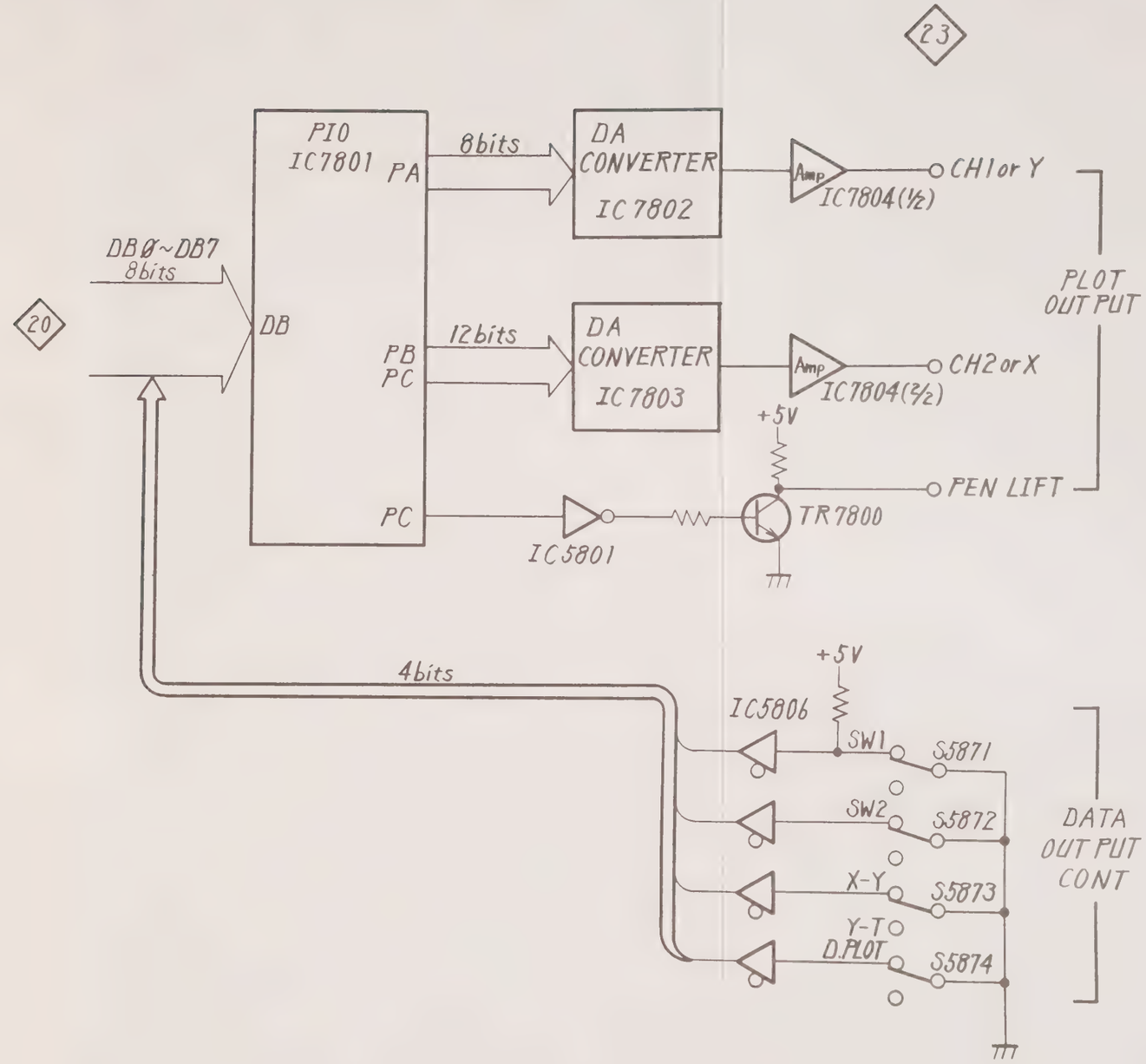

Fig. 5 - 29 PLOT I/F

5.22 POWER 2 (◇24◇)

Outline

This circuit supplies the voltages to the circuit performing the storage operation, the GPIB, the plot circuit, the ventilating fan and the CRT illumination lamp.
This circuit is a power supply circuit using a switching regulator, and uses hybrid IC IC7000 (STK7309) as a switching circuit. Fig. 5.30 is a simplified circuit diagram of this circuit.
When switching transistor TR5 in IC7000 is on, the energy is stored in pulse transformer T7000 by the collector current. The stored energy is emitted to the secondary circuit while TR5 is off. The feedback loop circuit controls the duration of the on and off periods to control the transfer amount of energy, i.e., to stabilize the output.
The description of the major functions follows.

(1) Switching operation
(2) Stabilizing operation of output
(3) Protection circuit of switching transistor

(1) Switching operation

The on-off operation is described.

a) When the power switch is turned to on, the positive voltage is applied to the base of switching transistor TR5 in IC7000 via starting resistors R7003 and R7004, and TR5 is turned to on. Thus, the collector current Ic flows to the primary winding N1 of T7000.

b) The voltage induced between terminals ② (positive) and ③ (negative) turns TR4 to on, increases the base current of TR5, and increases the collector current Ic.

c) When the collector current Ic of TR5 reaches to saturation, the induced voltage of N2 turns to zero, and TR5 turns to off.

d) The energy stored in T1501 becomes a current and fed to the secondary wiring N4 (N5 through N9), and is emitted through D7030.

e) The voltage induced at N2 (terminal ② : positive) turns TR5 on again.

The above operations are repeated.
The collector current of TR4, i.e., the base current of TR5, becomes the constant-current controlled by zener diode ZD3 and resistor R9. ZD3 and R9 are incorporated in IC1501.

(2) Stabilizing operation of output voltage

The DC voltage (approx. -28 V) is produced by rectifying the AC voltage fed back from winding N4 to windings N2 and N3 when TR5 is off. This DC voltage is divided, and added to the base of ERROR DETECTOR TR1 to stabilize the voltage of regulator output. In other words, the emitter potential of TR1 maintained constant by zener diode ZD1 is compared with the base potential of TR1 and the error signal is detected. This error signal is amplified by TR2, and supplied to the base of TR3, and the collector current of TR3 is thus controlled.
When the output voltage of the regulator rises, the collector current of TR3 increases, and the base current of TR4 is decreased.
Consequently, the base current of TR5 is also decreased and the saturation point of the collector current of TR5 is decreased. In other words, the amount of energy transferred to the secondary circuits of T7000 is reduced by making the on-

duration of TR5 short. The voltage across R7008 is supplied to the base of TR2 through R7005 to match the timing to turn TR5 to off, ie, the timing to control the collector current of TR3 with the timing of the peak of the collector current of TR5.
The control circuit is provided so that the rated output voltage is obtained when the AC supply voltage is in a high range.
When the AC supply voltage exceeds approximately 170 V, TR706 is on and prevents an increase of the base voltage of TR4. The increase in the output voltage of the power circuit is thus suppressed.

(3) Protection circuit of the switching transistor

Circuit protection after turning power to on

a) Immediately after the power switch is turned to on, triac thyristor D7001 is off, and the charging current of C7002 (and C7003) flows to R7000. This prevents the rush current from doing damage to the circuits.
The voltage induced at N2 is supplied to D7001 as a negative trigger pulse. Then, D7001 turns to on, and this power circuit becomes a steady state.

b) Immediately after the power switch is turned to on, the base voltage of TR1 is much higher than the emitter voltage of TR1, compared with the steady operation state, because the charging speed of C7014 and C7016 is different.
As a result, the collector current of TR3 increases, and the base current of TR4 decreases. The base current of TR5 decreases, and the collector current of TR5 is limited to a small amount. After C7014 and C7016 are charged, this power circuit becomes a steady state.

c) D7004 is a 3.6 V zener diode, and determines the upper limit of the base current of TR5 together with D7003 and R7008. This prevents the excessive current from flowing to TR5.

d) When the output voltage +5 V or -5 V increases excessively, D7031 conducts and the diode at the primary side of phote-coupler IC7005 emits a light. Then the diode at the secondary side conducts, and TR7005 is on. As the result, the base potential of TR4 in IC7000 lowers, the drive current of TR5 reduces, and the oscillation stops. The output voltage thus becomes zero.

e) Solid state heater assembly R7034 detects the change in the surface temperature of output rectifier diode D7060. When the temperature rises, the resistance value of R7034 increase abruptly and TR7030 becomes on.
As the result, the diode at the primary side of IC7005 emits a light, and the oscillation stops as described in d).
When the oscillation stotps, the power switch becomes off, and is not restored if turned to on immediately because the diode at the secondary side of IC7005 continues to be on until the charging time determined by the time constant of C7002, C7003, R7003 and R7004 is over. The diode at the secondary side has such a characteristic as it is not turned to off if a receiving light goes out while it is conducting.

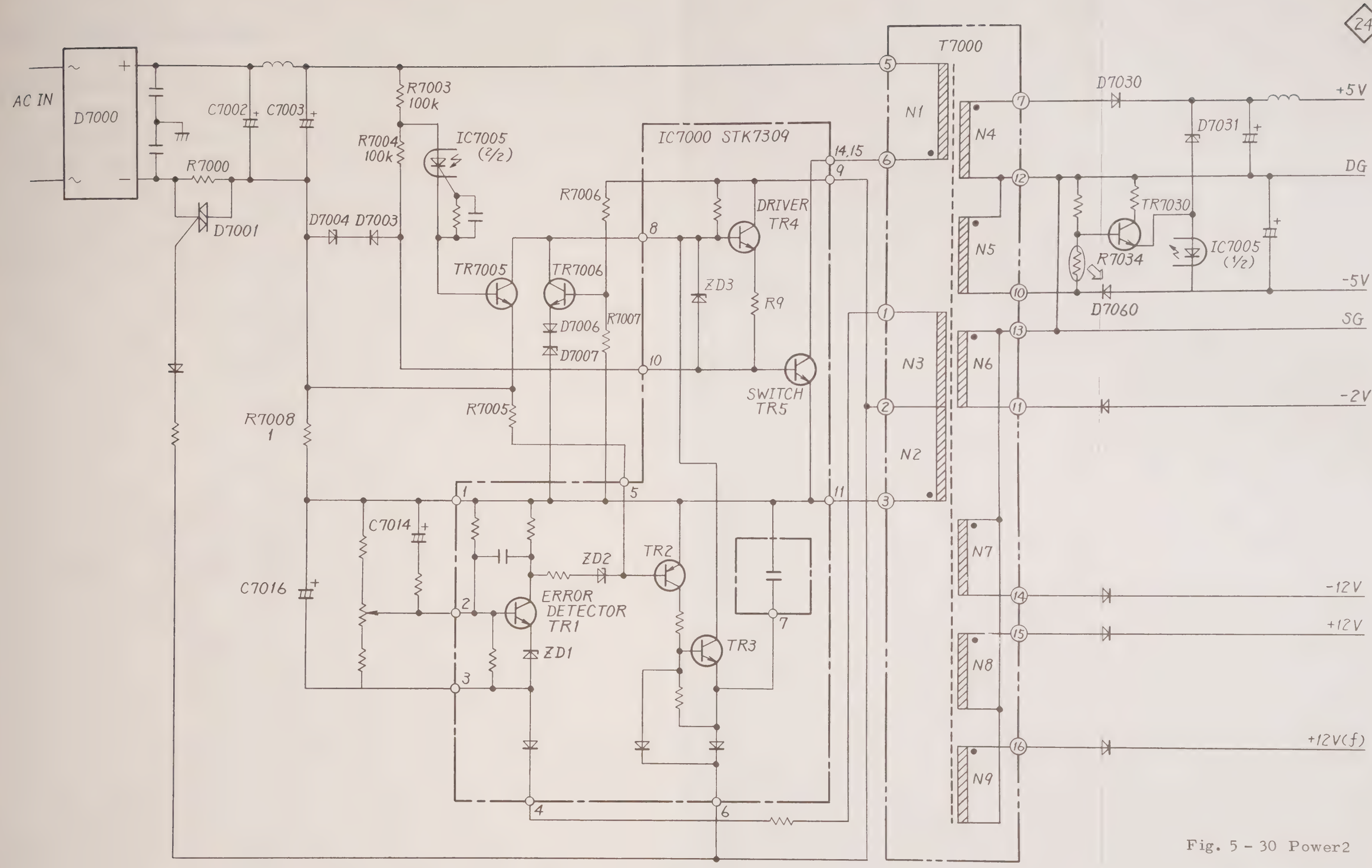

Fig. 5 - 30 Power2

6. POWER UNIT REMOVAL PROCEDURES

1. Board removal

(a) Unscrew the two screws securing the bracket and the PEF-830 board, and remove the board with the bracket.
(b) Unscrew the two screws securing the PEF-831 board, and remove the board from the SUB POW bracket.
(c) Unscrew the two screws securing the SUB POW bracket, and remove the bracket from the chassis.

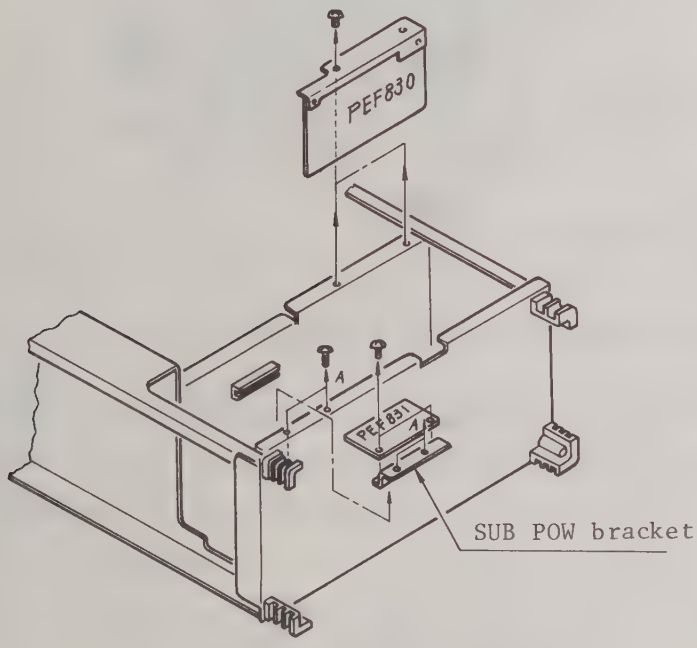

2. Power unit removal

(a) Unscrew the four screws on the rear of the chassis, and pull out the power unit upward.

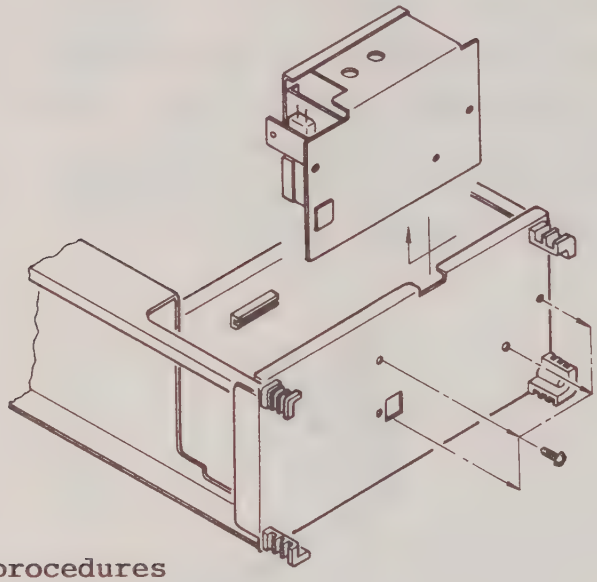

CRT removal procedures

1. Removal of upper and bottom covers

(a) Unscrew the six screws on both the sides of the upper cover, and remove the upper cover.

(b) Unscrew the six screws on the bottom, and remove the bottom cover.

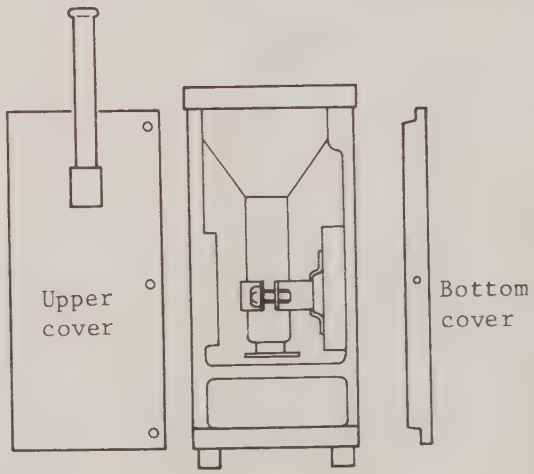

2. Anode cap removal

(a) Unscrew the two screws on the A/D section, and swing the board of the A/D section.
(b) Remove the anode cap of the CRT.

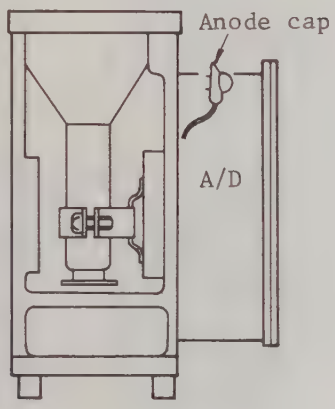

3. Socket removal

(a) Unscrew the seven screws on the POW board and the high voltage case, and swing the POW board.
(b) Remove the rotation coil connector from the POW board.
(c) Remove the socket from the CRT.

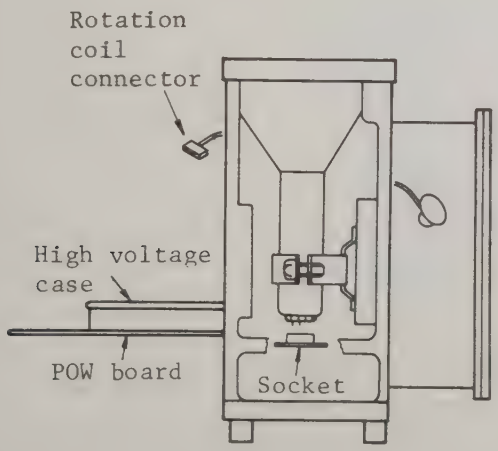

4. CRT removal

(a) Unscrew the two screws on the CRT bracket.

(b) Push out the CRT in the direction of front.

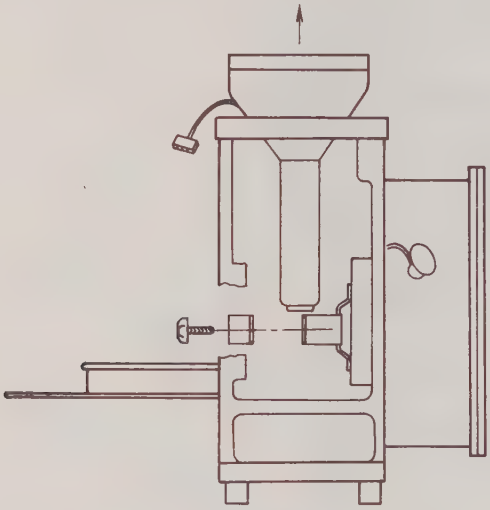

7. ELECTRICAL PARTS ARRANGEMENT
(With adjustment location)

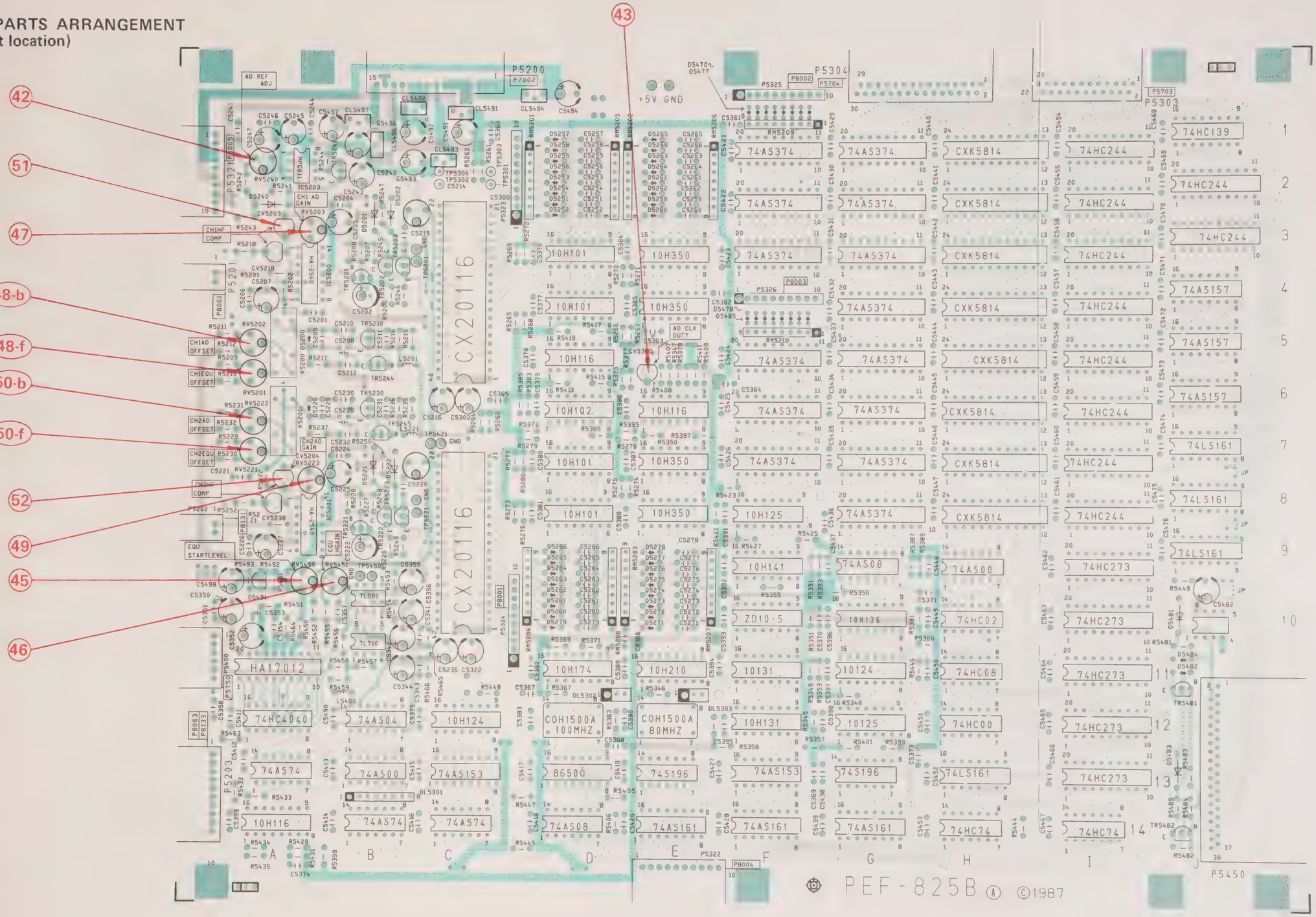

PEF-825B (Parts side)

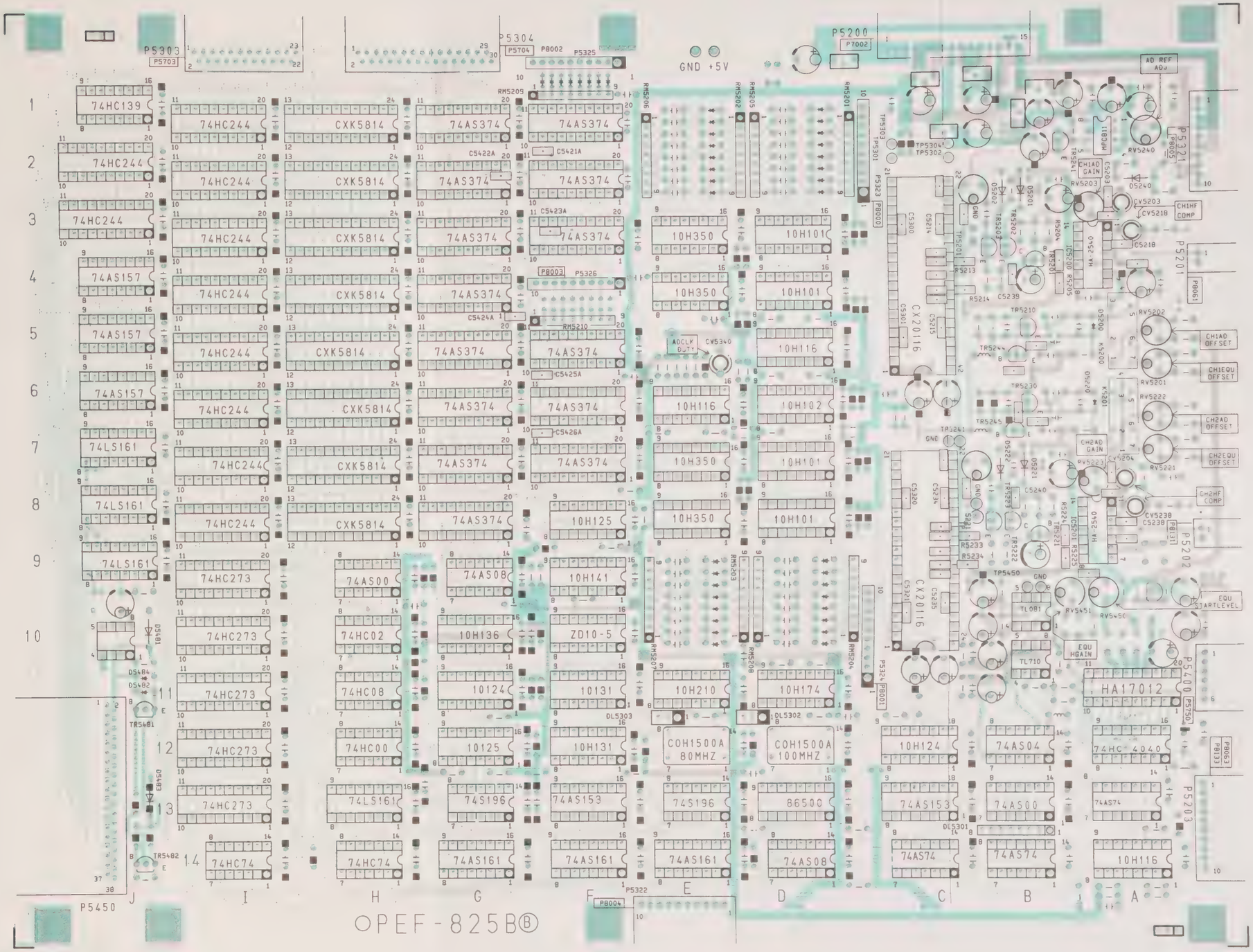

PEF-825B (Soldering side)

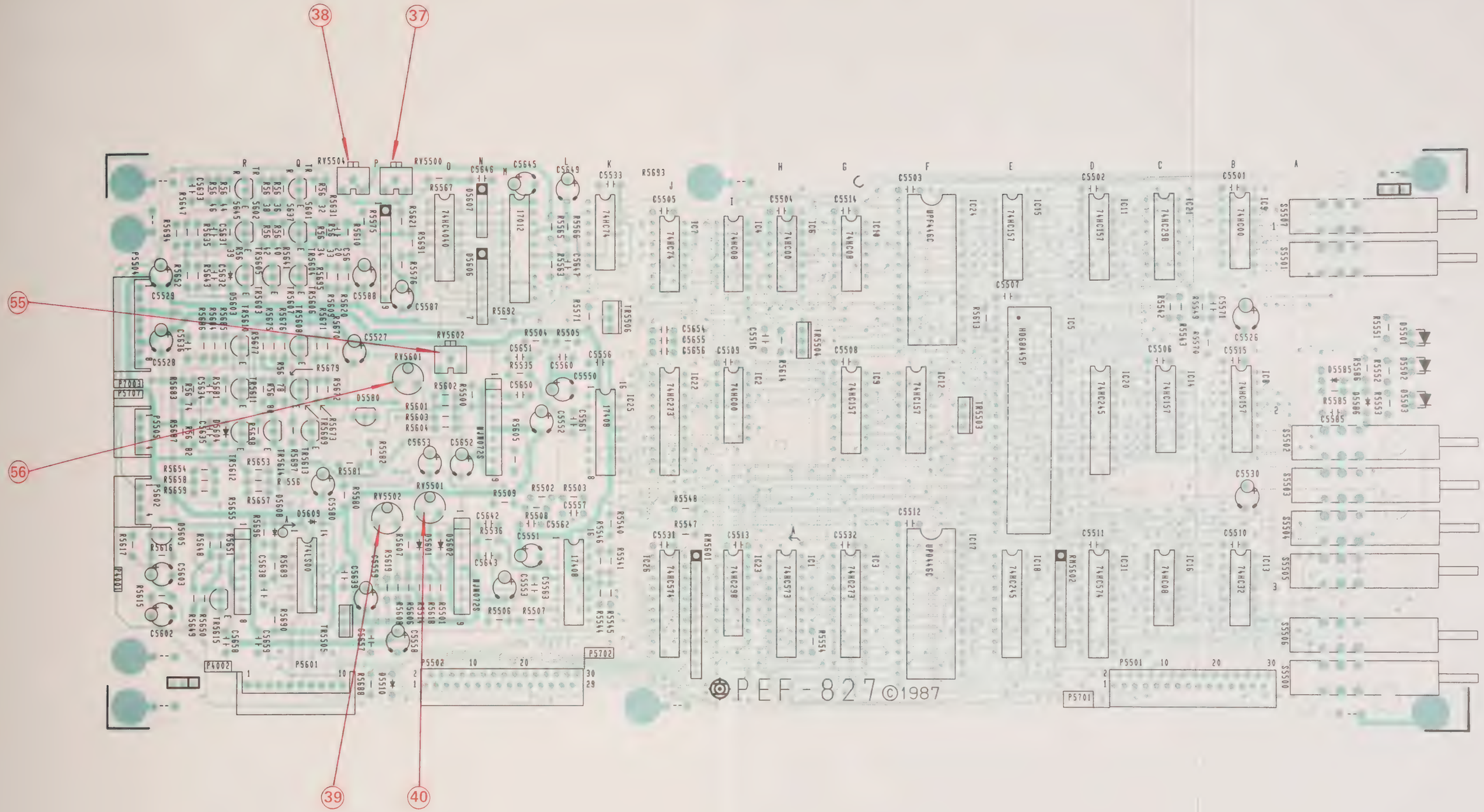

PEF-827 (Parts side)

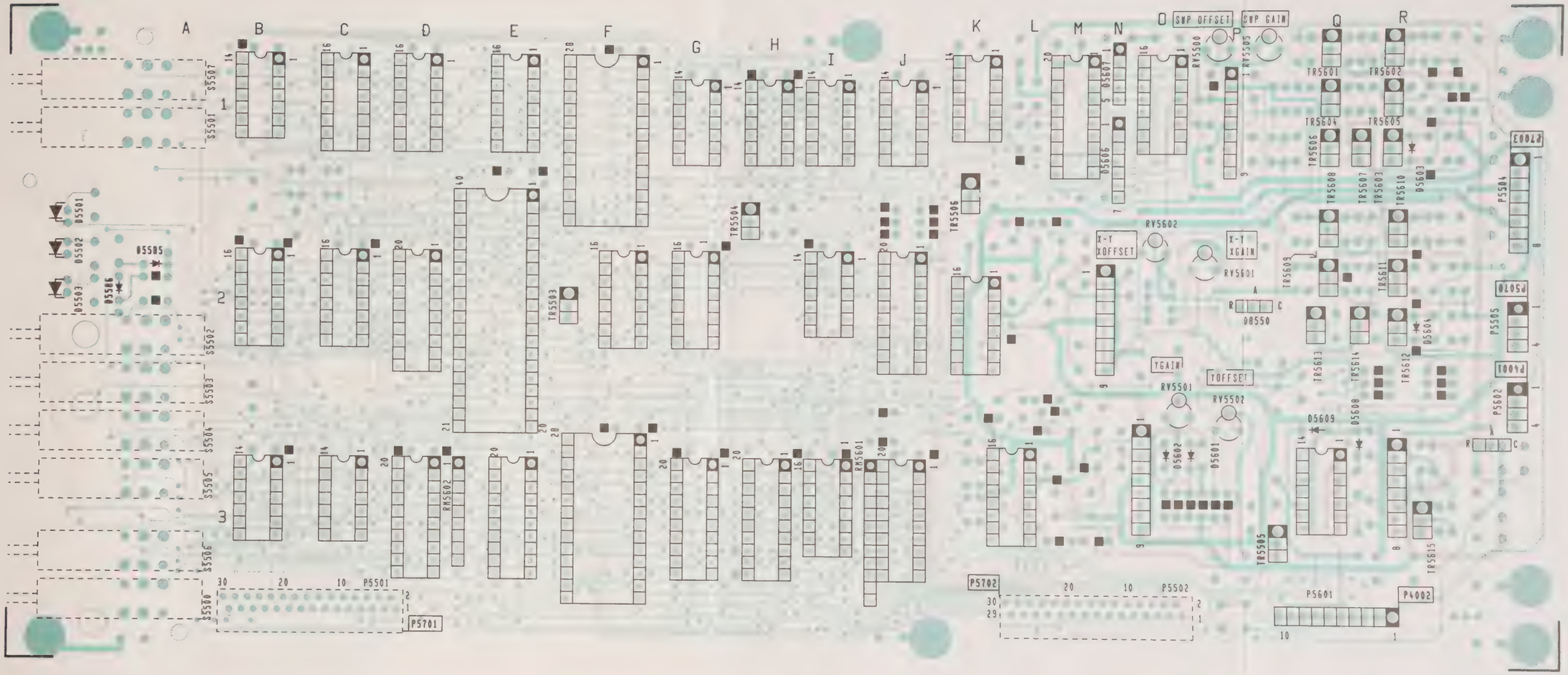
A
B
C
D
E
F
G
H
I
J
K
L
M
N
O
P
Q
R
SWP OFFSET
SWP GAIN
RV5500
RV5505
RV5601
RV5602
X-Y XOFFSET
X-Y YGAIN
YGAIN
YOFFSET
RV5501
RV5502
RV5600
RV5603
RV5604
RV5605
RV5606
RV5607
RV5608
RV5609
RV5610
RV5611
RV5612
RV5613
RV5614
RV5615
TR5501
TR5502
TR5503
TR5504
TR5505
TR5506
TR5507
TR5508
TR5509
TR5510
TR5511
TR5512
TR5513
TR5514
TR5515
TR5601
TR5602
TR5603
TR5604
TR5605
TR5606
TR5607
TR5608
TR5609
TR5610
TR5611
TR5612
TR5613
TR5614
TR5615
D5501
D5502
D5503
D5504
D5505
D5506
D5507
D5508
D5509
D5510
D5511
D5512
D5513
D5514
D5515
D5601
D5602
D5603
D5604
D5605
D5606
D5607
D5608
D5609
D5610
D5611
D5612
D5613
D5614
D5615
S5501
S5502
S5503
S5504
S5505
S5506
S5507
S5508
P5501
P5502
P5503
P5504
P5505
P5506
P5507
P5508
P5509
P5510
P5511
P5512
P5513
P5514
P5515
P5516
P5517
P5518
P5519
P5520
P5521
P5522
P5523
P5524
P5525
P5526
P5527
P5528
P5529
P5530
P5531
P5532
P5533
P5534
P5535
P5536
P5537
P5538
P5539
P5540

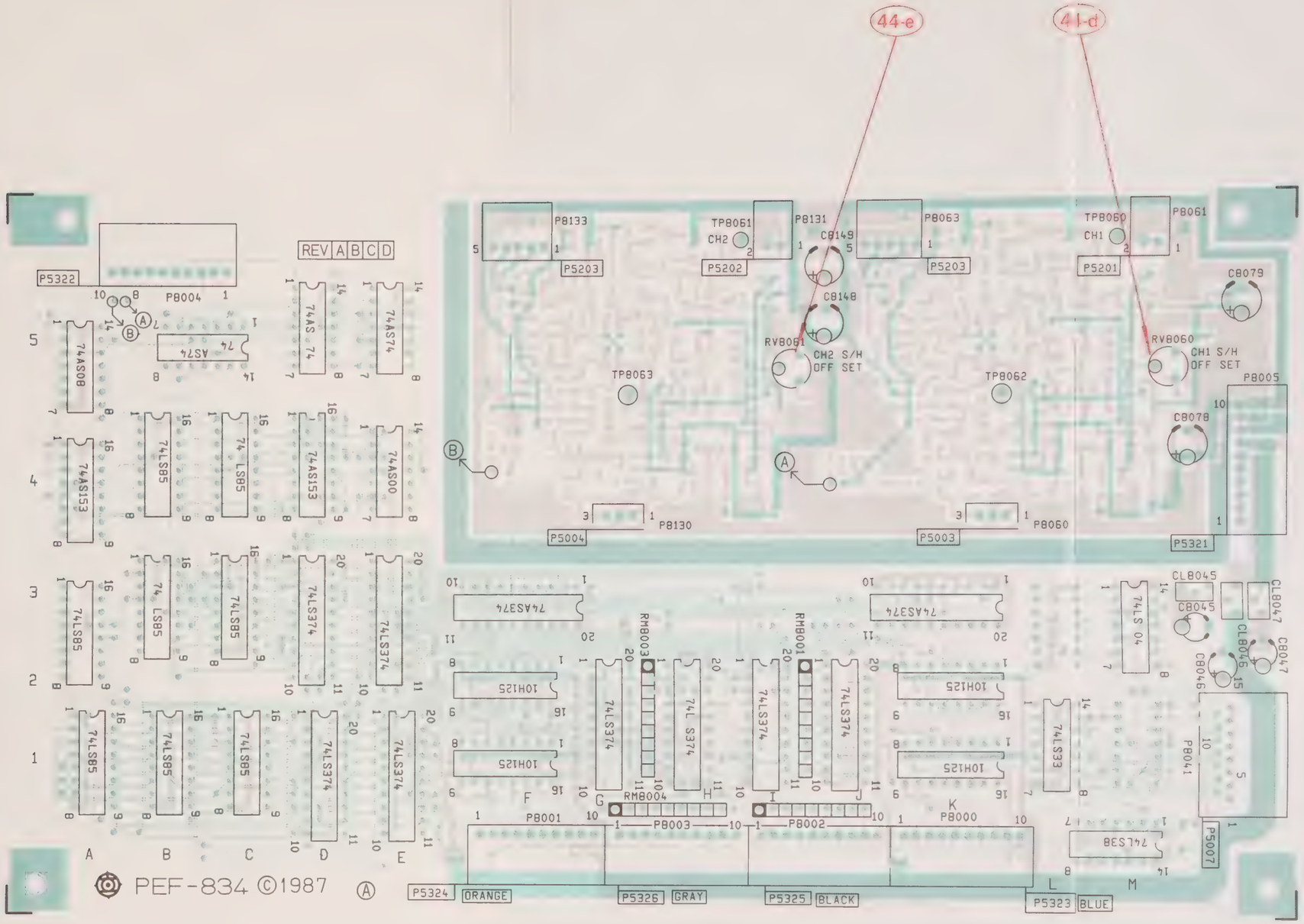

PEF-834 (Parts side)

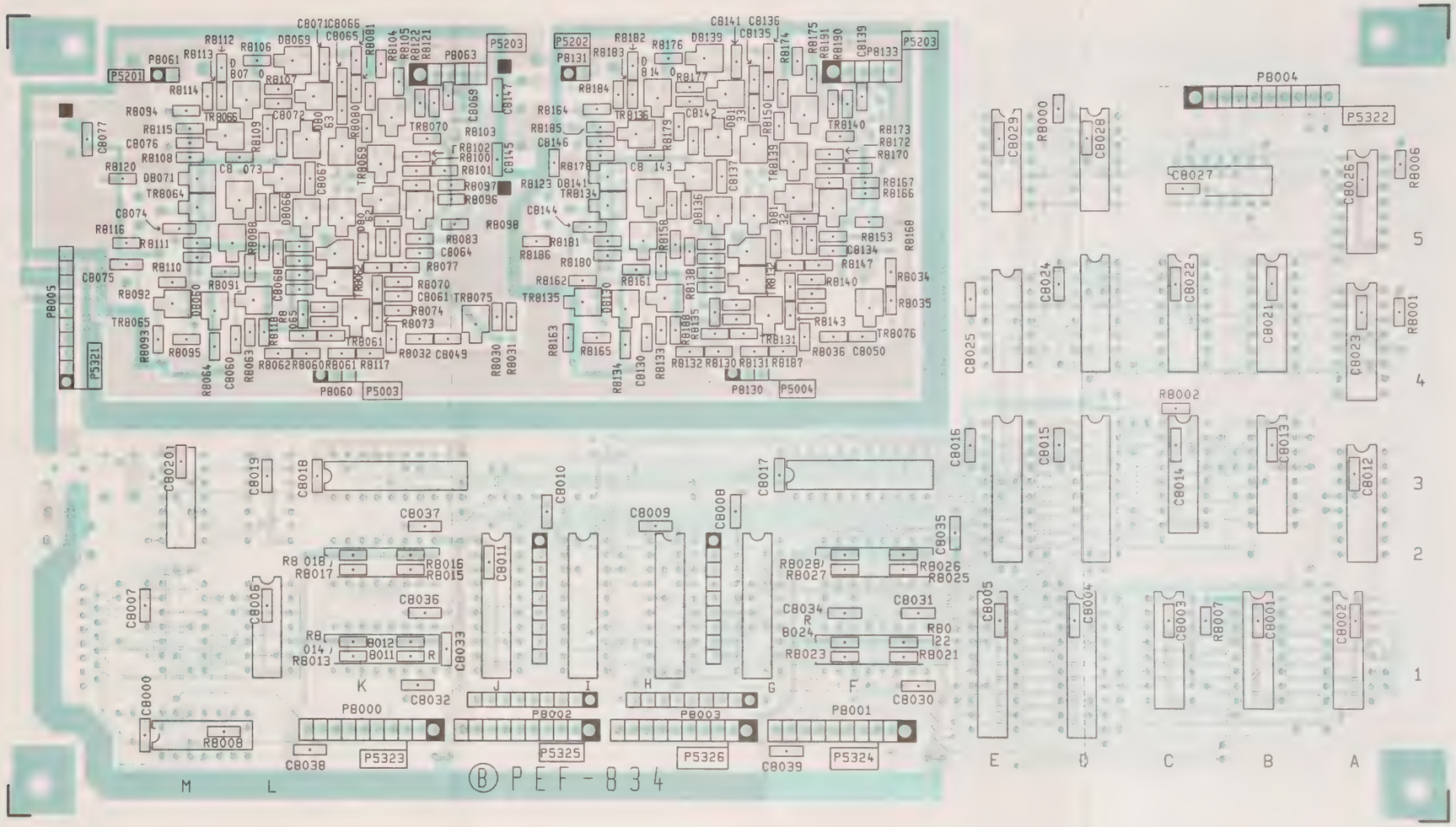

PEF-834 BS 87/06/26

PEF-834 (Soldering side)

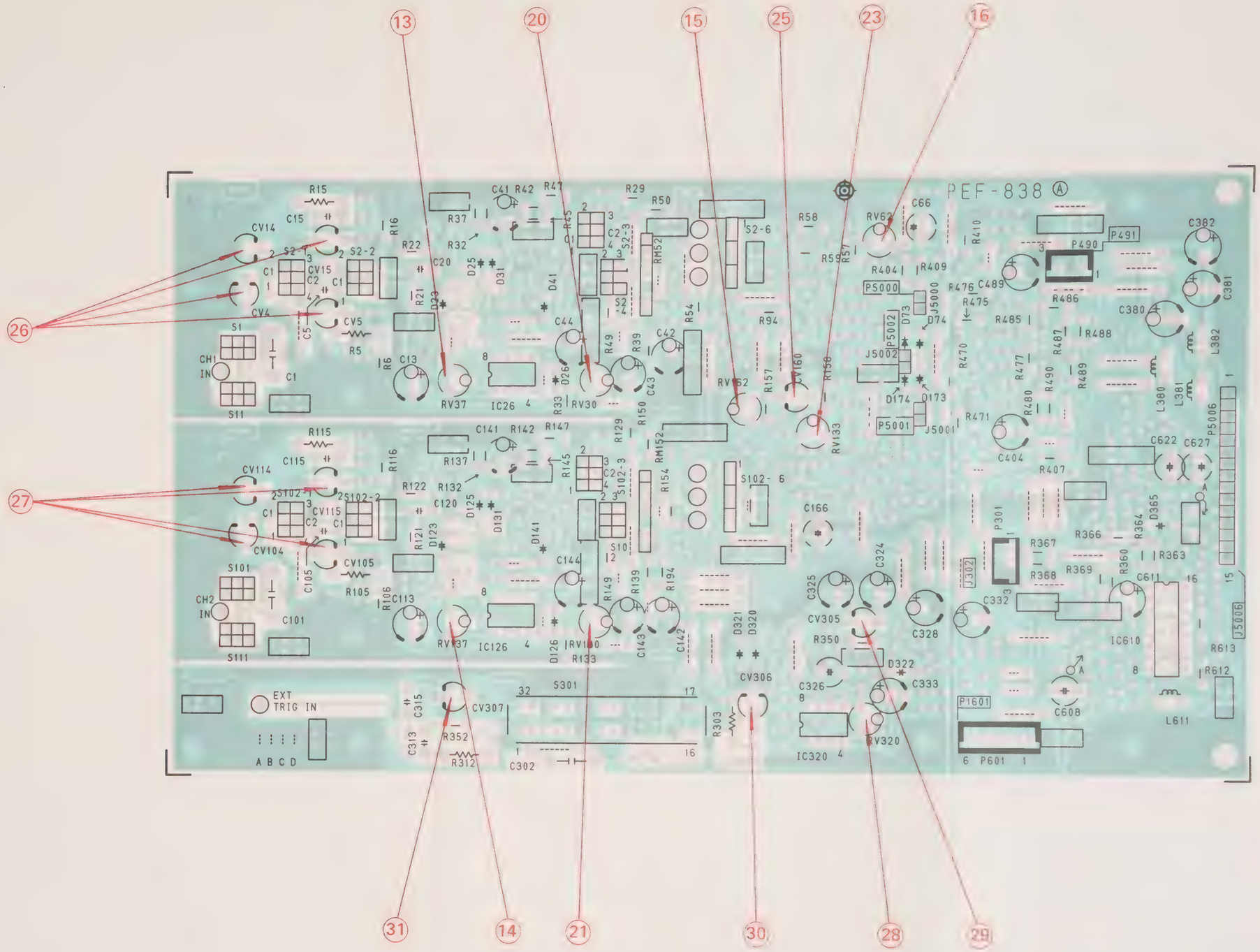

PEF-838 (Parts side)

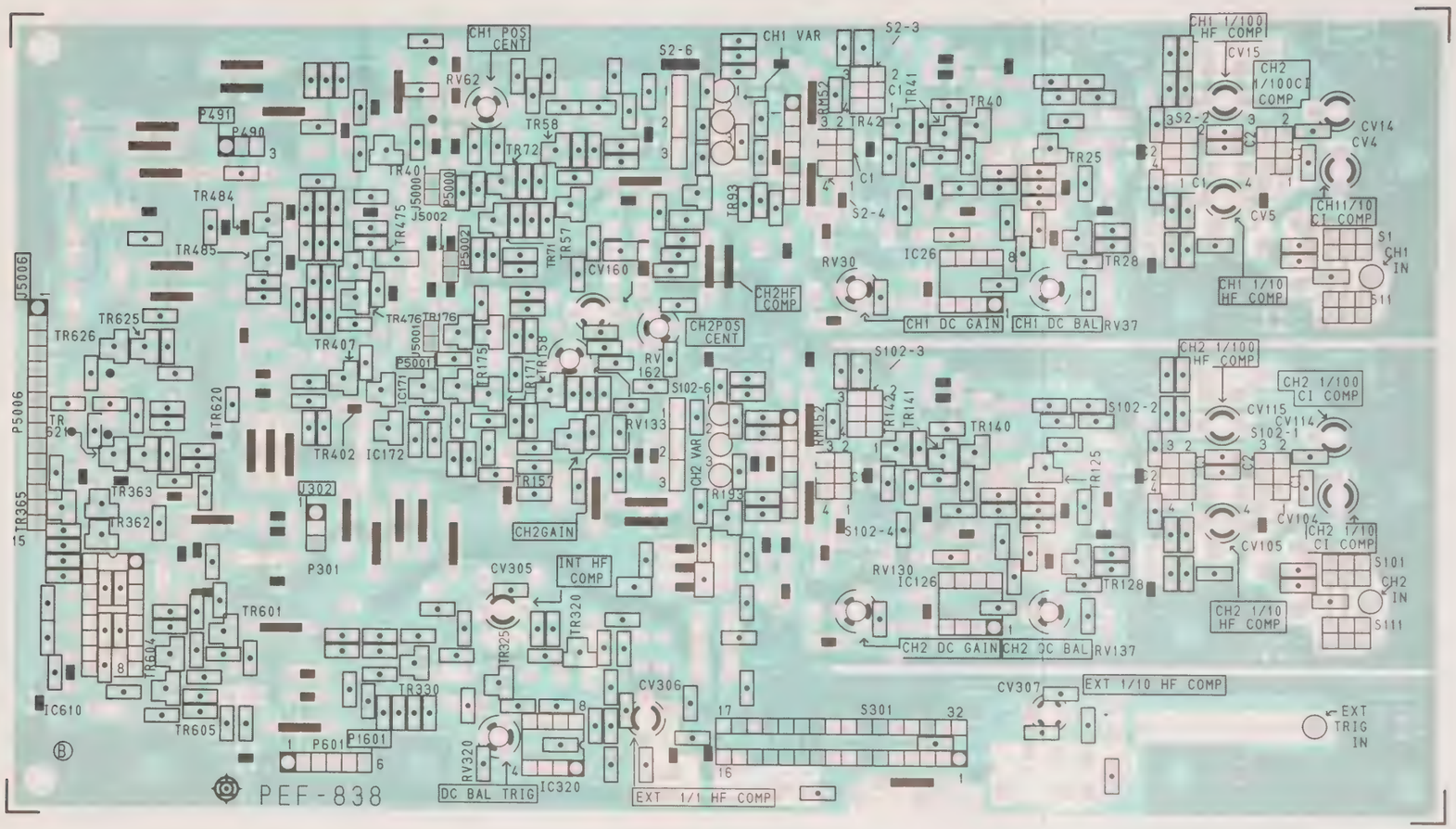

PEF-838 (Soldering side)

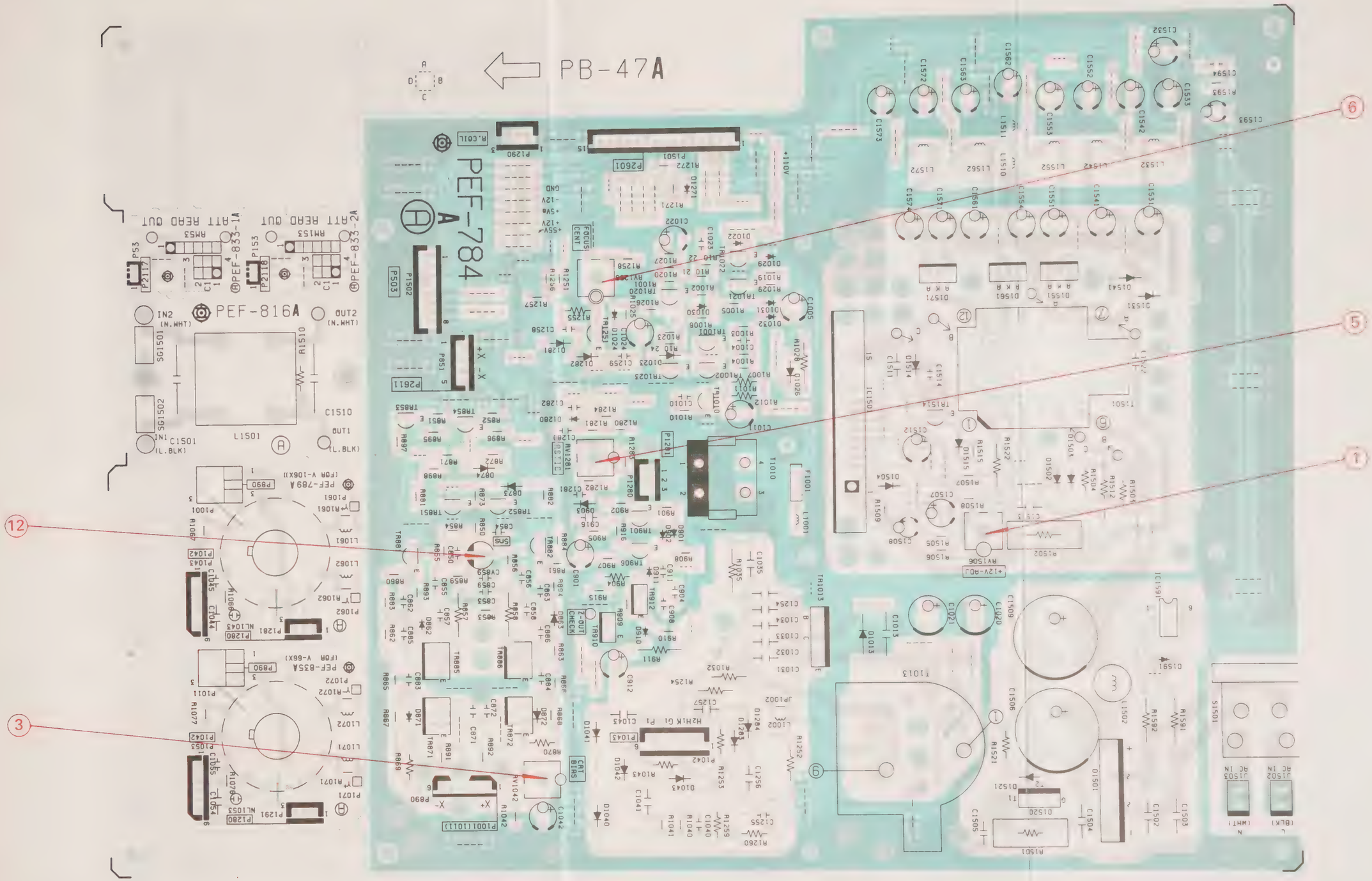

PEF-784A, 789A, 816A, 833-1A, 833-2A, 835A (Parts side)

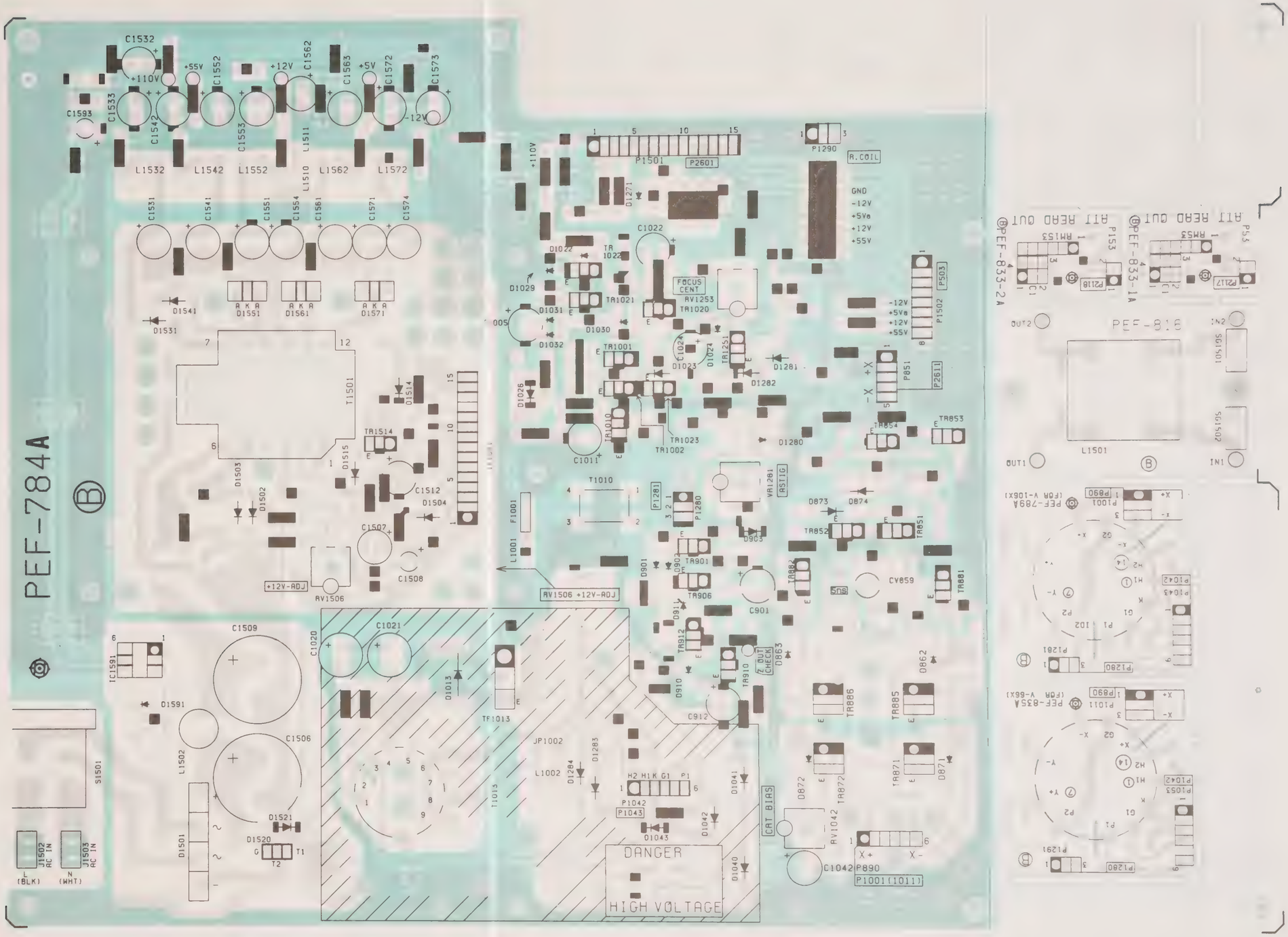

PEF-784A, 789A, 816A, 833-1A, 833-2A, 835A (Soldering side)

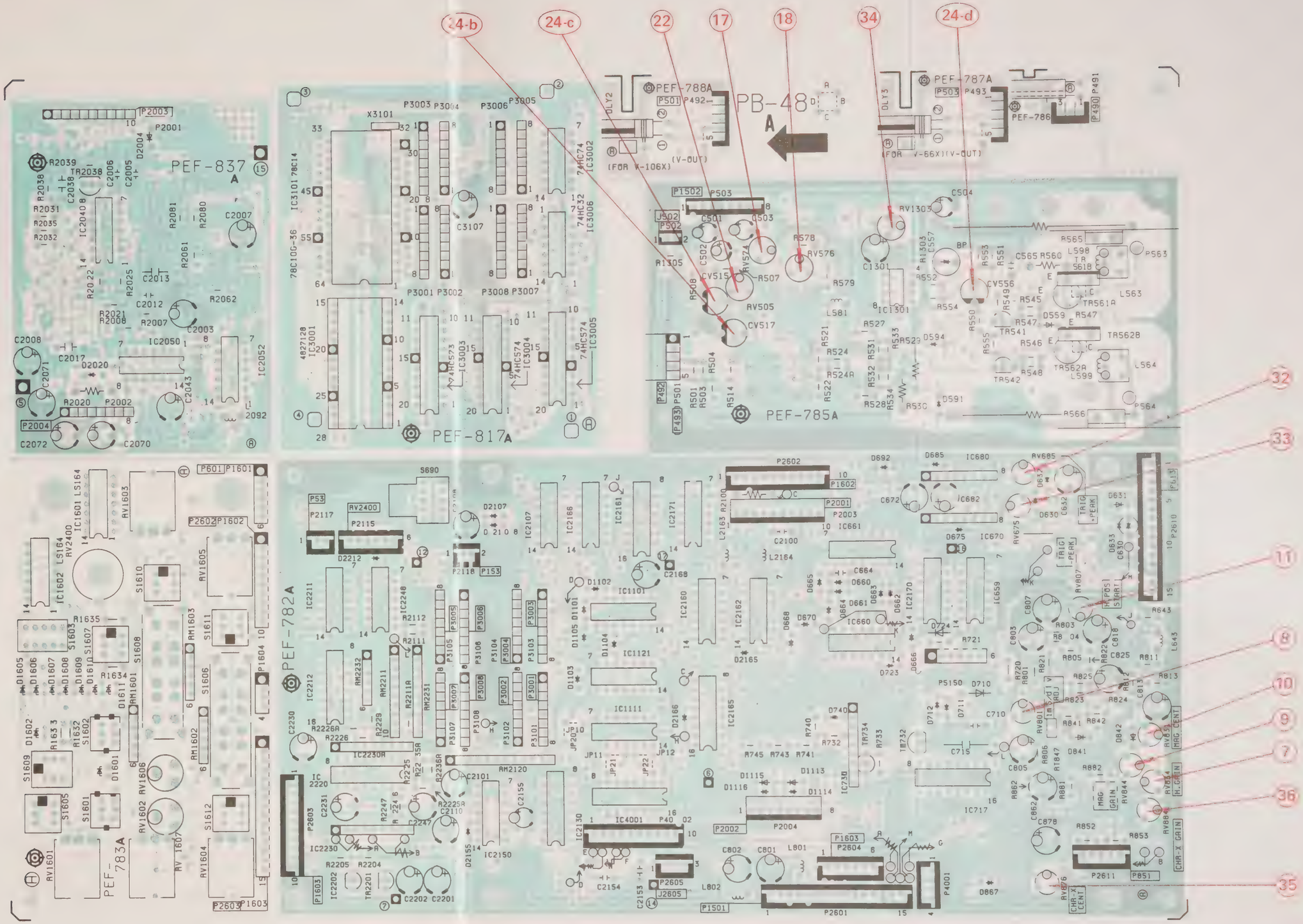

PEF-782A, 783A, 785A, 786, 787A, 788A, 817A, 837 (Parts side)

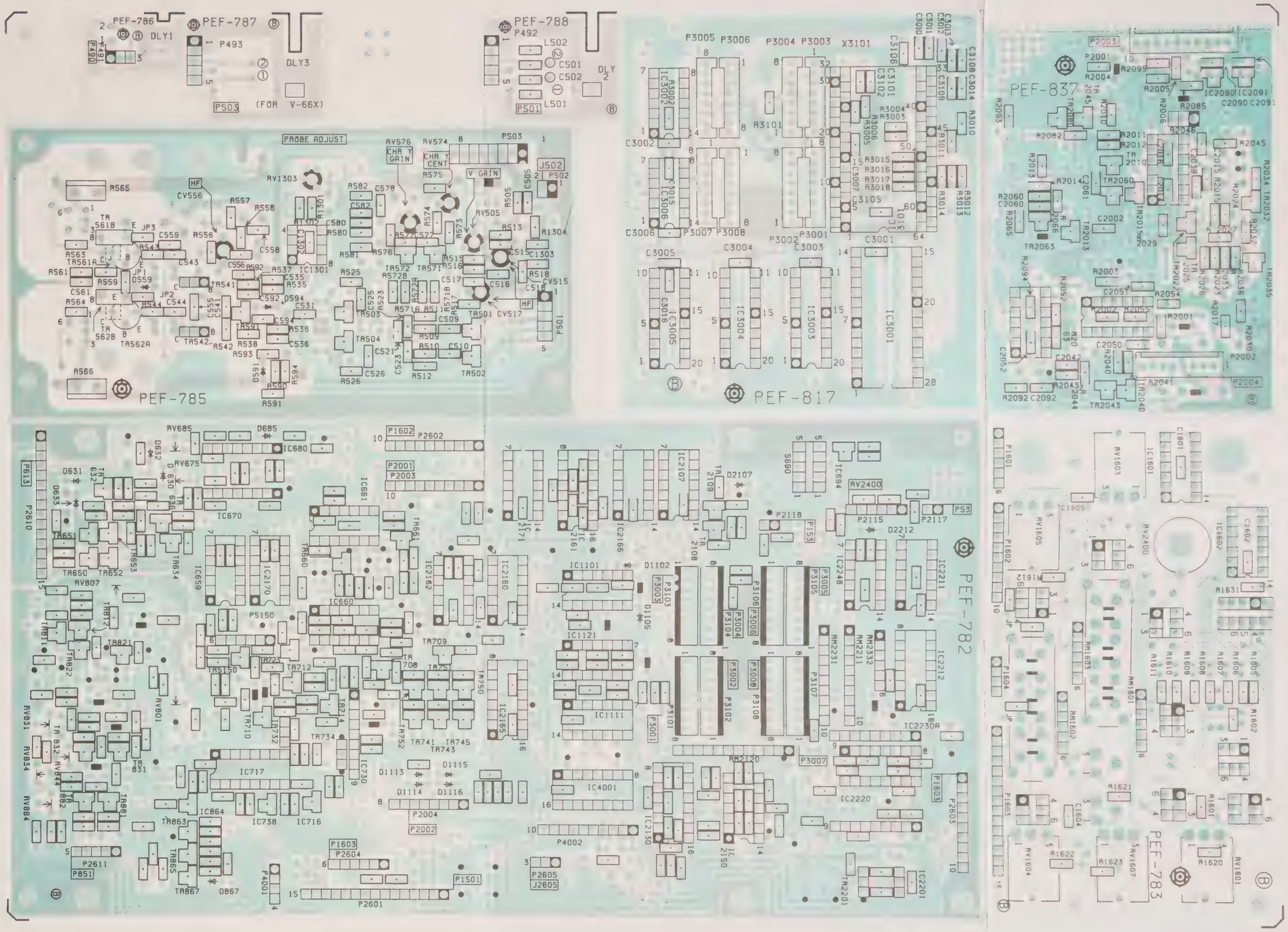

PEF-782A, 783A, 785A , 786 , 787A, 788A, 817A, 837 (Soldering side)

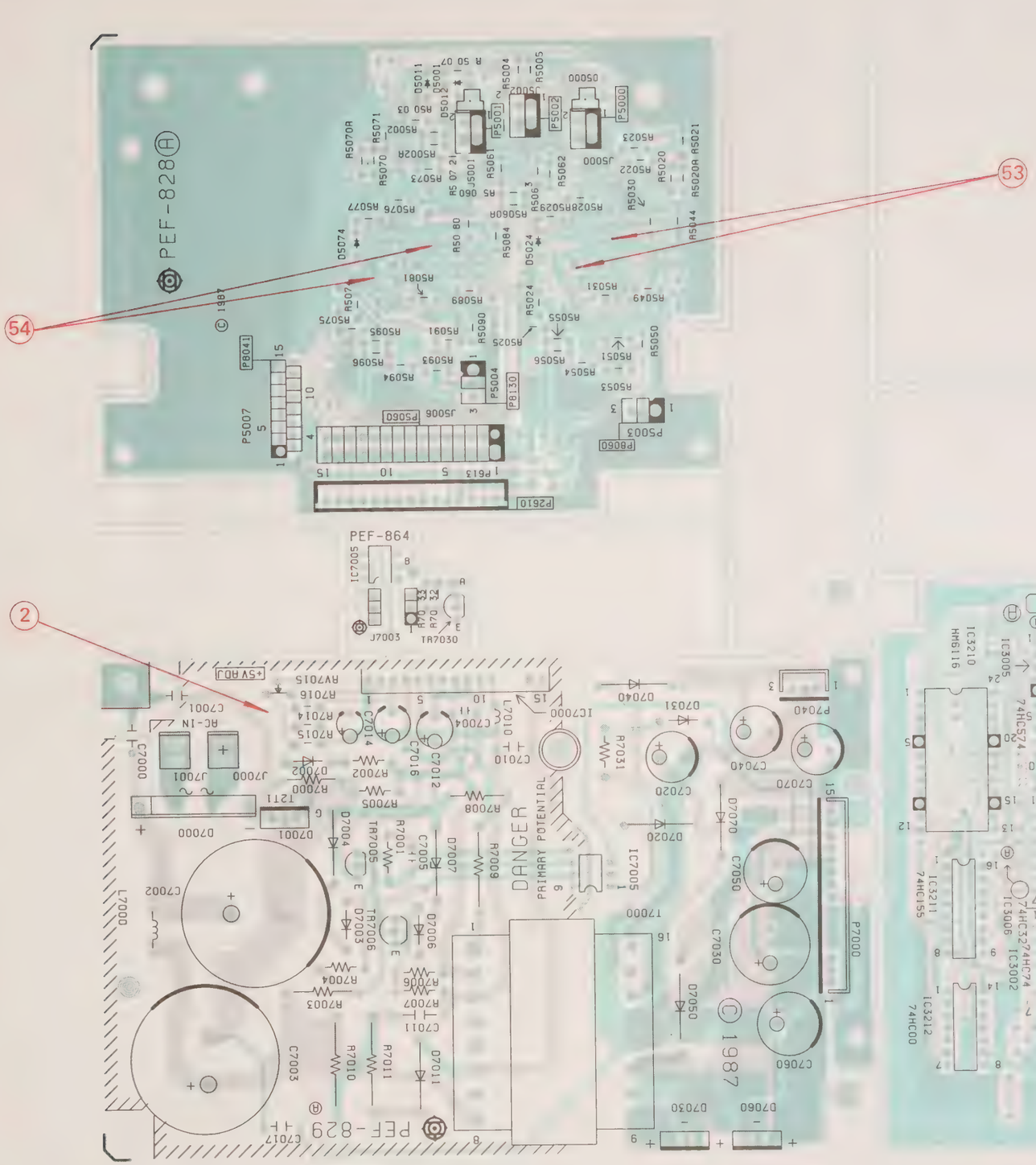

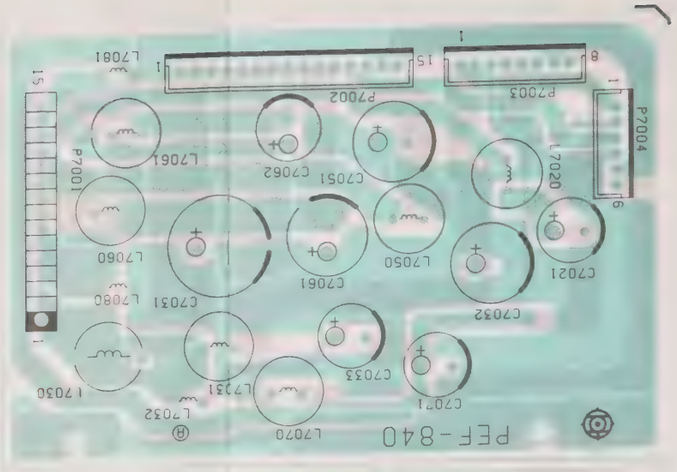

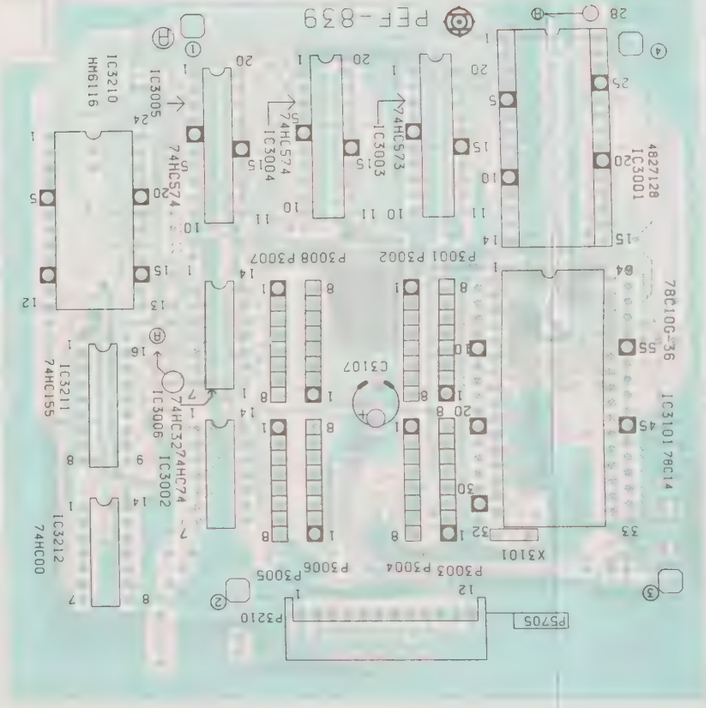

PEF-828A, 829, 839, 840 (Parts side)

PEF-840
P7001
P7002
P7003
P7004

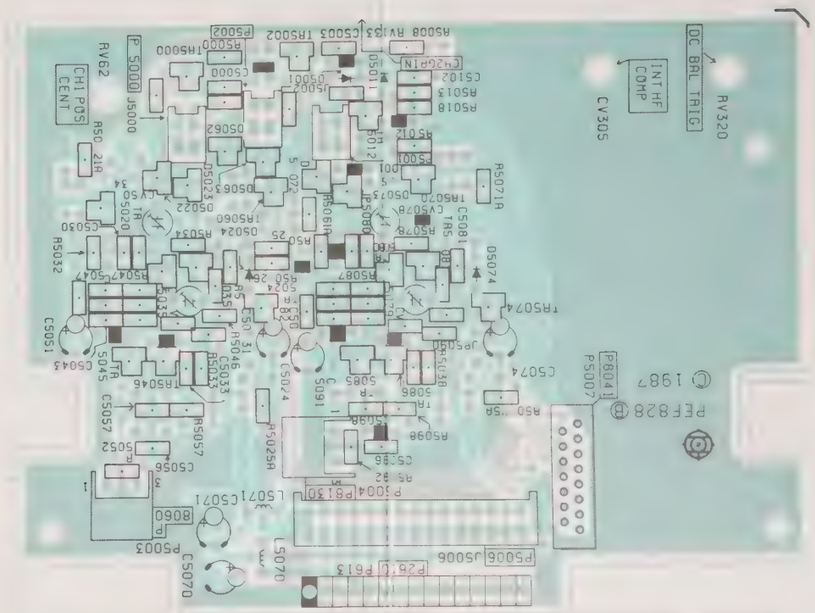
PEF 864
PEF828
1987
RV320
DC BAL TRIG
INT HF COMP
CV305
RV602
CH1 POS CENT
P5000
J5000
J5001
J5002
P5002
P5003
P5004
P5006
J5006
P6130
P6131
P6132
P6133
P6134
P6135
P6136
P6137
P6138
P6139
P6140
P6141
P6142
P6143
P6144
P6145
P6146
P6147
P6148
P6149
P6150
P6151
P6152
P6153
P6154
P6155
P6156
P6157
P6158
P6159
P6160
P6161
P6162
P6163
P6164
P6165
P6166
P6167
P6168
P6169

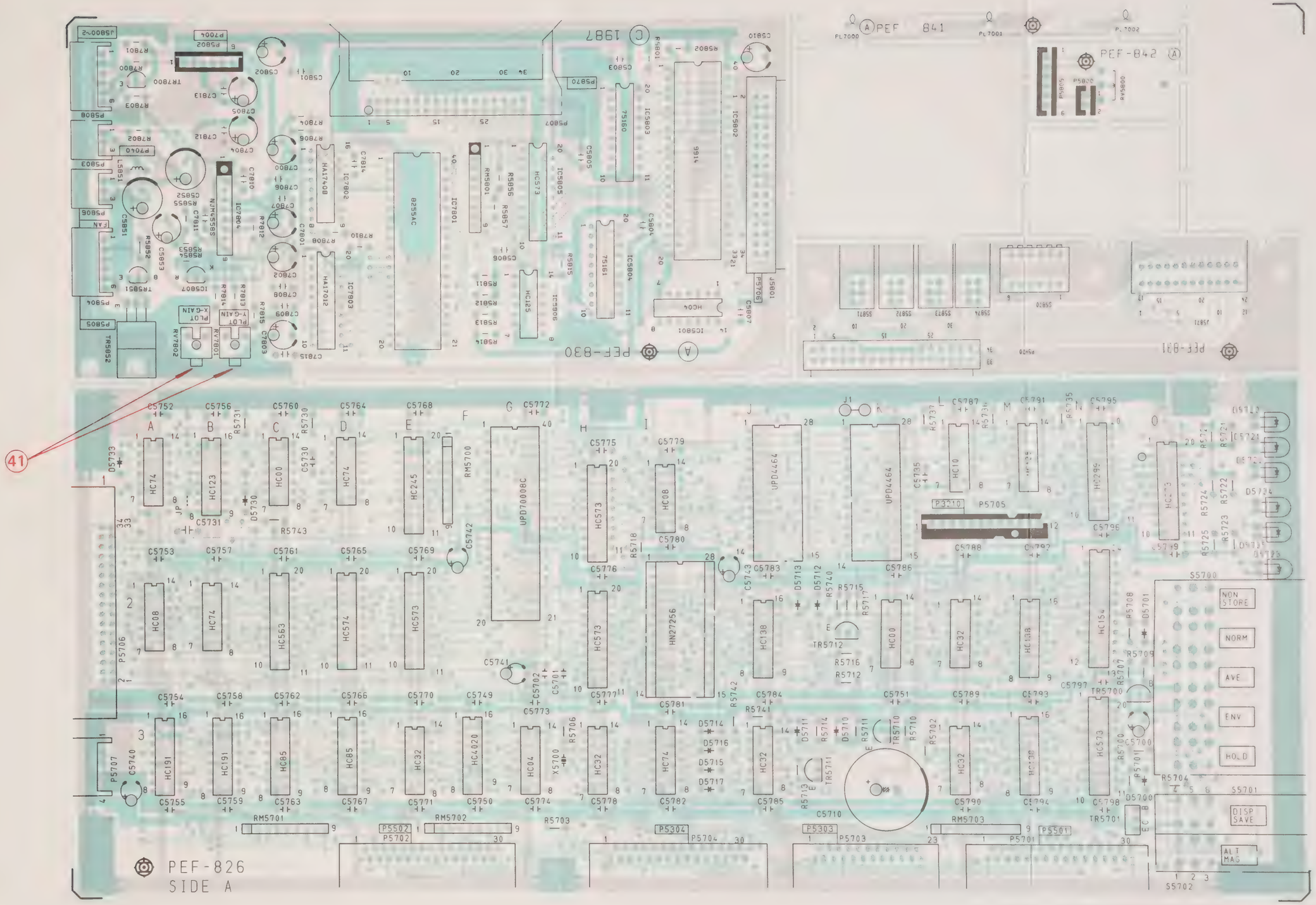

PEF-826, 830, 831, 842A (Parts side)

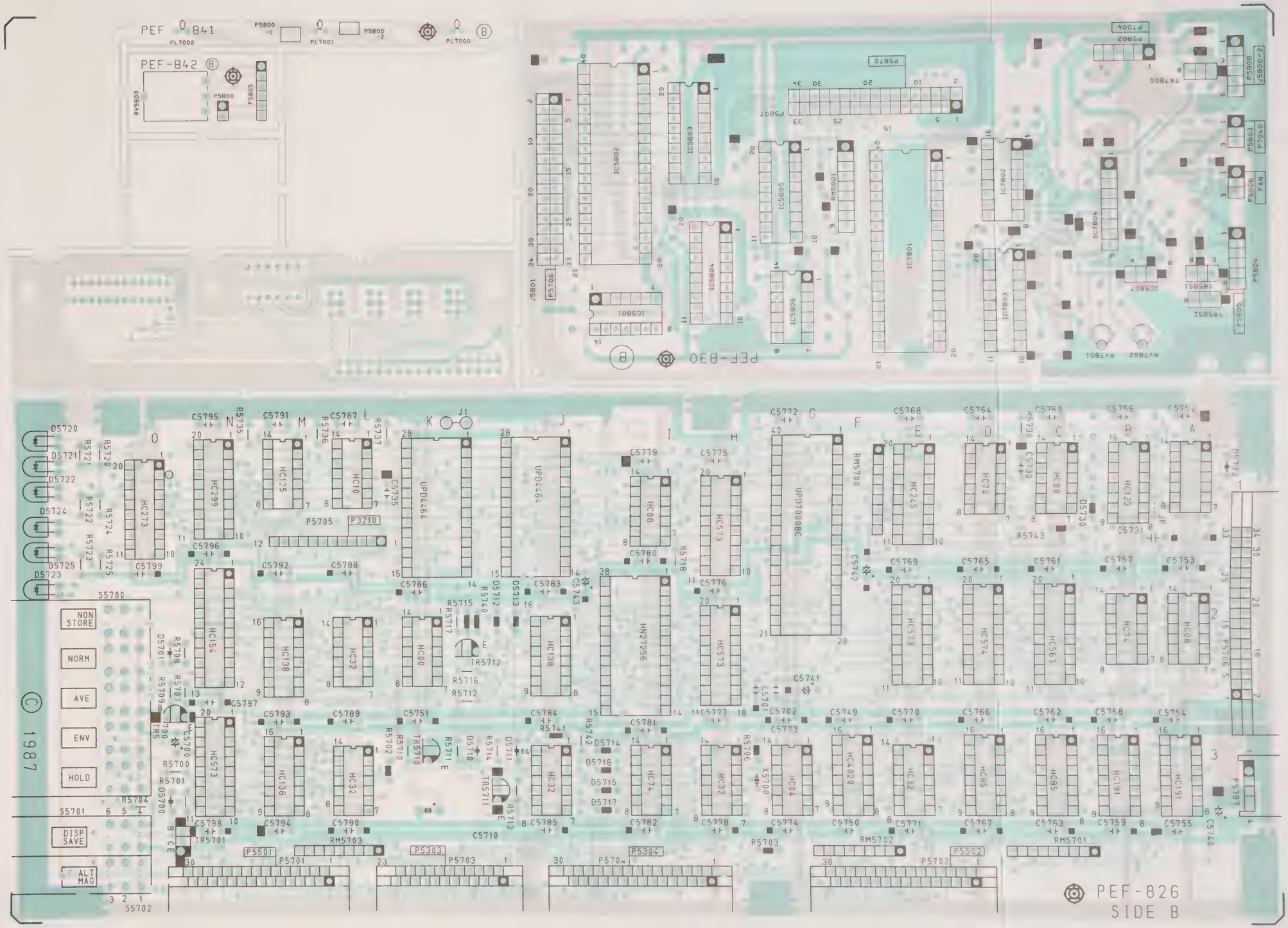

PEF-826, 830, 831, 842A

8. ELECTRICAL PARTS LEAD CONFIGURATIONS

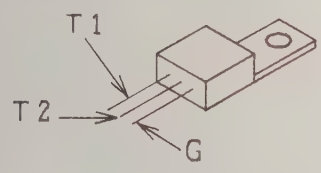

DTA10E

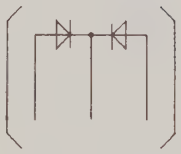

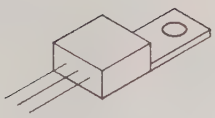

FML-12S
FML-24
SB-50-18
SB-100-09

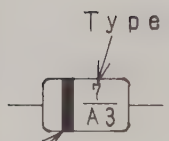

AVY BLUE

HZ7A3 HZ11A
HZ12B HZ6B
HZ7B-2 HZ7A1

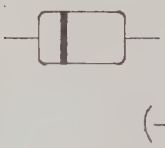

GZB 2.4B
GZB 3.0B
GZB 6.8B
GZB 3.6

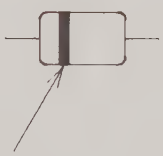

GREEN

MA161

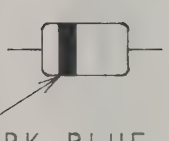

DARK BLUE

MTZ 3.3JA
MTZ 4.7JB
MTZ 7.5JC
MTZ 6.8JC

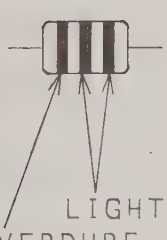

LIGHT BLUE
VERDURE

1SS83

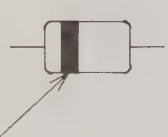

COLOR BAND

1SS83 1SS165
1SS110 1SS286
1SS123
1SS133
1SS153

SILVER

S5566B

BROWN

RU3AMLF

SILVER

AU01

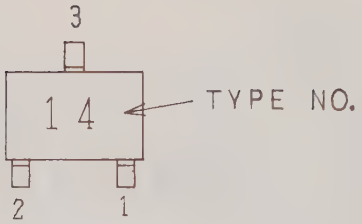

HZM SERIES

1. ANODE TYPE NO.14 HZM 4B
2. ANODE TYPE NO.17 HZM 5B
3. CATHODE TYPE NO.24 HZM 7C

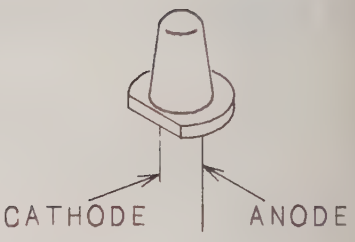

LN31GPH
SR503D
TNS9914NL

32D27

(THERMISTER)

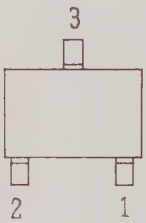

DCA010	DCA015	HSM88S
1. NC	1. CATHODE	1. CATHODE1
2. CATHODE	2. CATHODE	2. ANODE2
3. ANODE	3. ANODE	3. CATHODE2, ANODE1

PTH48-7A
(POSISTER)

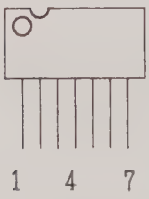

DAP601

1~3, 5~7. CATHODE
4. ANODE

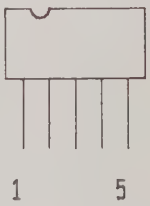

DAP401

1. ANODE
2~6. CATHODE

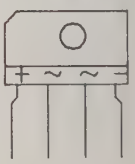

RBV-406

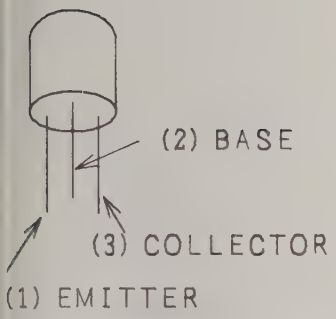

2SA458C

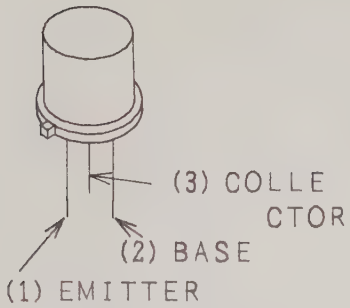

2SC1252

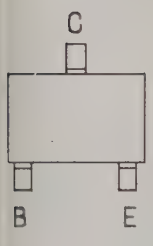

OP VIEW)

SA1052
SA1226E4

2SA1245
2SA1462
2SB624BV3
2SC1621B4
2SC2462LC
2SC2620QC
2SC2735JC
2SC3772LY4
2SC3775OY-4
2SD596DV3
2SC37750Y

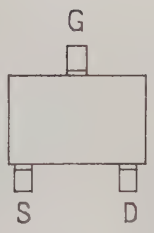

(TOP VIEW)

2SK303V4
2SK436A20
2SK508K52

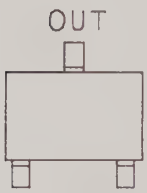

DTC124K
DTA124S

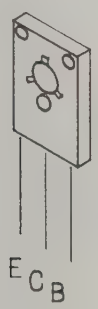

2SA1210S
2SC2912S

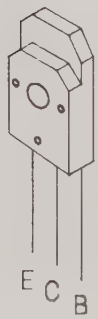

2SC3090

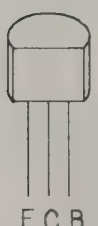

2SA778AK
2SA1029D
2SA1188E
2SC535C
2SC641K
2SC1213AC
2SC1906
2SC2853E
2SC3068
2SC458C
2SD1207R

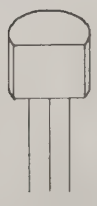

2SC2407 (1)
2SC2408

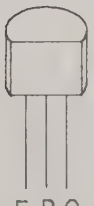

2SA1206

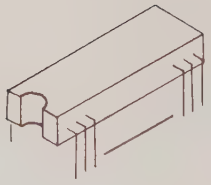

14PINS

HD74LS00P
HD74LS04P
HD74LS10P
HD74LS38P
HD74LS74AP
HD74LS164P
HD74LS393P
HD74HC00P
HD74HC02P
HD74HC04P
HD74HC08P
HD74HC10P
HD74HC32P
HD74HC74P
HD74HC125P
TC40H000P
TC40H002P
TC40H164P
HA1-2540-4

16PINS

HD10124
HD10125
HD10131
HD10136
HD14040BP
HD14051BP
HD14053BP
HD74HC85P
HD74HC138P
HD74HC139P
HD74HC155P
HD74HC157P
HD74HC191P
HD74HC298P
HD74HC4020P
HD74HC4040P
HD74HC123AP
HD74LS85P
HD74LS157P
HD74LS161P
HD74LS298P
HD74LS194AP
MC10H101L
MC10H102L
MC10H116L
MC10H124L
MC10H125L
MC10H131L
MC10H136L
MC10H141L
MC10H174L
MC10H210L
MC10H350L
TC40H151P

8PINS

μPC811C

20PINS

HD74HC244P
HD74HC245P
HD74HC273P
HD74HC299P
HD74HC563P
HD74HC573P
HD74HC574P
HD74LS374P

24PINS

HD74HC154P

28PINS

μPD4464C

40PINS

μPD70008C
μPD8255AC-5

64PINS

μPD78C10G-36

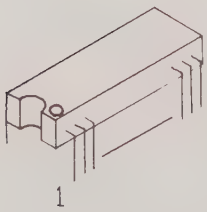

16PINS

MC74HC4052N
MC74HC4053N
HA17408P

20PINS

HA17012PB

40PINS

HD46505RP-1

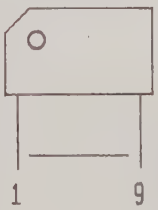

9PINS

NJM4558S

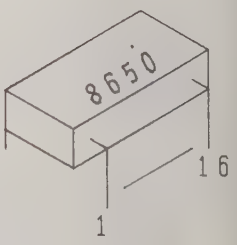

16PINS

8650-0

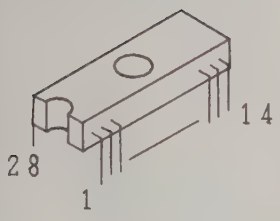

28PINS

HN27256G-25

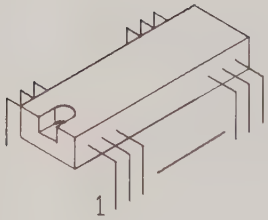

14PINS

SN74AS00N
SN74AS04N
SN74AS08N
SN74AS74N
SN74LS33N
SN74S196N
TL064CN

16PINS

SN74AS153N
SN74AS157N
SN74AS161N
SN74LS594N

20PINS

SN75160N
SN75161N
SN74AS374N

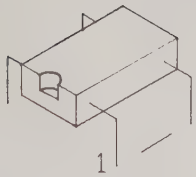

8PINS

MN3102

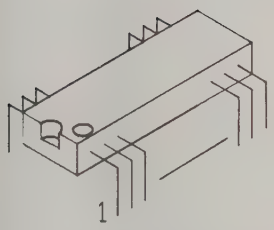

14PINS

NJM319D

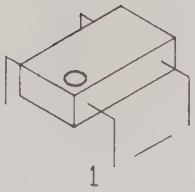

6PINS

PC714U
S22MD1

8PINS

TL081CP
TL710CP

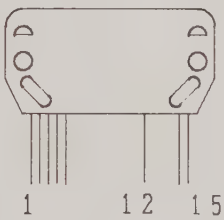

STK7308
STK7309

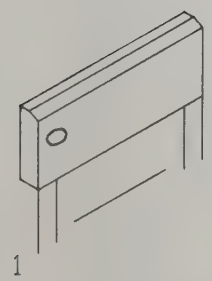

9PINS

NJM072S

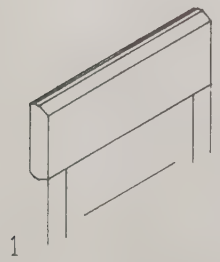

8PINS

M5201L

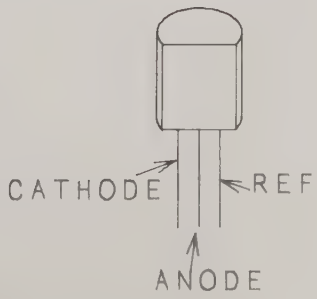

TL431CLP-B

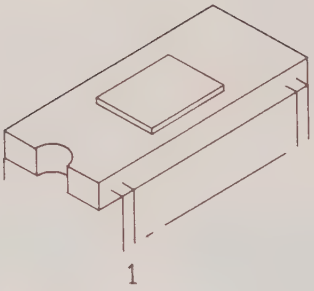

42PINS

CX20116

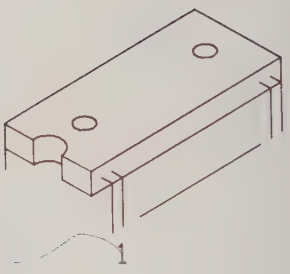

24PINS

HM6116ALP-4

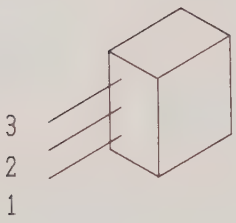

UN4213

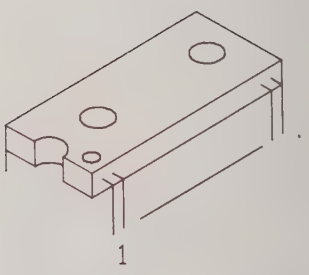

24PINS

CXK5814P-35L

LECTRICAL PARTS LIST
838 V-PRE & TRIG AMP

	PART CODE	DESCRIPTION	Q'TY
	CQM0431	C,Plastic 400V 0.047μF ±10%	1
	CCG0128	C,Ceramic,Chip 50V 15pF ±5%	1
	CCG0128	C,Ceramic,Chip 50V 15pF ±5%	1
	CCD0274	C,Ceramic 500V 3pF ±0.25pF	1
	CCG0136	C,Ceramic,Chip 50V 33pF ±5%	1
	CCG0116	C,Ceramic,Chip 50V 2pF ±0.25pF	1
	CCG0211	C,Ceramic,Chip 50V 10000pF ±10%	1
	CES0133	C,Al Elyc 16V 47μF ±20%	1
	CCD0272	C,Ceramic 500V 1pF ±0.25pF	1
	CCG0144	C,Ceramic,Chip 50V 220pF ±5%	1
	CCG0142	C,Ceramic,Chip 50V 82pF ±5%	1
	CCD0286	C,Ceramic 500V 1000pF +100% -0%	1
	CCG0126	C,Ceramic,Chip 50V 12pF ±5%	1
	CCG0211	C,Ceramic,Chip 50V 10000pF ±10%	1
	CCG0128	C,Ceramic,Chip 50V 15pF ±5%	1
	CCG0201	C,Ceramic,Chip 50V 470pF ±5%	1
	CCG0116	C,Ceramic,Chip 50V 2pF ±0.25pF	1
	CES0133	C,Al Elyc 16V 47μF ±20%	1
	CES0133	C,Al Elyc 16V 47μF ±20%	1
	CES0133	C,Al Elyc 16V 47μF ±20%	1
	CES0133	C,Al Elyc 16V 47μF ±20%	1
	CCG0211	C,Ceramic,Chip 50V 10000pF ±10%	1
	CCG0211	C,Ceramic,Chip 50V 10000pF ±10%	1
	CCG0211	C,Ceramic,Chip 50V 10000pF ±10%	1
	CCG0119	C,Ceramic,Chip 50V 5pF ±0.25pF	1
	CCG0121	C,Ceramic,Chip 50V 7pF ±0.5%	1
	CCG0213	C,Ceramic,Chip 50V 0.1μF +80% -20%	1
	CCG0120	C,Ceramic,Chip 50V 6pF ±0.5pF	1
	CCG0211	C,Ceramic,Chip 50V 10000pF ±10%	1
	CCG0203	C,Ceramic,Chip 50V 680pF ±5%	1
	CEX0189	C,Al Elyc 16V 10μF ±20% BP	1
	CCG0203	C,Ceramic,Chip 50V 680pF ±5%	1
	CCG0120	C,Ceramic,Chip 50V 6pF ±0.5pF	1
	CCG0117	C,Ceramic,Chip 50V 3pF ±0.25pF	1
	CCG0211	C,Ceramic,Chip 50V 10000pF ±10%	1
	CCG0116	C,Ceramic,Chip 50V 2pF ±0.25pF	1
	CMU0047	C,Mica,Chip 500V 27pF ±1%	1
	CCG0211	C,Ceramic,Chip 50V 10000pF ±10%	1
	CCG0211	C,Ceramic,Chip 50V 10000pF ±10%	1
	CCG0176	C,Ceramic,Chip 50V 1pF ±0.25pF	1
	CQM0431	C,Plastic 400V 0.047μF ±10%	1
	CCG0128	C,Ceramic,Chip 50V 15pF ±5%	1
	CCG0128	C,Ceramic,Chip 50V 15pF ±5%	1
	CCD0274	C,Ceramic 500V 3pF ±0.25pF	1
	CCG0136	C,Ceramic,Chip 50V 33pF ±5%	1
	CCG0116	C,Ceramic,Chip 50V 2pF ±0.25pF	1
	CCG0211	C,Ceramic,Chip 50V 10000pF ±10%	1
	CES0133	C,Al Elyc 16V 47μF ±20%	1
	CCD0272	C,Ceramic 500V 1pF ±0.25pF	1
	CCG0144	C,Ceramic,Chip 50V 220pF ±5%	1
	CCG0142	C,Ceramic,Chip 50V 82pF ±5%	1
	CCD0286	C,Ceramic 500V 1000pF +100% -0%	1
	CCG0126	C,Ceramic,Chip 50V 12pF ±5%	1
	CCG0211	C,Ceramic,Chip 50V 10000pF ±10%	1
	CCG0128	C,Ceramic,Chip 50V 15pF ±5%	1
	CCG0201	C,Ceramic,Chip 50V 470pF ±5%	1
	CCG0116	C,Ceramic,Chip 50V 2pF ±0.25pF	1
	CES0133	C,Al Elyc 16V 47μF ±20%	1
	CES0133	C,Al Elyc 16V 47μF ±20%	1
	CES0133	C,Al Elyc 16V 47μF ±20%	1

SYMBOL	PART CODE	DESCRIPTION	Q'TY
C145	CCG0211	C,Ceramic,Chip 50V 10000pF ±10%	1
C146	CCG0211	C,Ceramic,Chip 50V 10000pF ±10%	1
C147	CCG0211	C,Ceramic,Chip 50V 10000pF ±10%	1
C151	CCG0119	C,Ceramic,Chip 50V 5pF ±0.25pF	1
C153	CCG0121	C,Ceramic,Chip 50V 7pF ±0.25pF	1
C157	CCG0213	C,Ceramic,Chip 50V 0.1μF +80% -20%	1
C162	CCG0211	C,Ceramic,Chip 50V 10000pF ±10%	1
C165	CCG0203	C,Ceramic,Chip 50V 680pF ±5%	1
C166	CEX0189	C,Al Elyc 16V 10μF ±20% BP	1
C167	CCG0203	C,Ceramic,Chip 50V 680pF ±5%	1
C169	CCG0120	C,Ceramic,Chip 50V 6pF ±0.5pF	1
C172	CCG0117	C,Ceramic,Chip 50V 3pF ±0.25pF	1
C173	CCG0211	C,Ceramic,Chip 50V 10000pF ±10%	1
C174	CCG0117	C,Ceramic,Chip 50V 3pF ±0.25pF	1
C178	CCG0211	C,Ceramic,Chip 50V 10000pF ±10%	1
C192	CMU0047	C,Mica,Chip 500V 27pF ±1%	1
C193	CCG0211	C,Ceramic,Chip 50V 10000pF ±10%	1
C194	CCG0211	C,Ceramic,Chip 50V 10000pF ±10%	1
C302	CQM0431	C,Plastic 400V 0.047μF ±10%	1
C305	CCG0117	C,Ceramic,Chip 50V 6pF ±0.25pF	1
C310	CCG0213	C,Ceramic,Chip 50V 0.1μF +80% -20%	1
C311	CCG0119	C,Ceramic,Chip 50V 5pF ±0.25pF	1
C312	CCG0136	C,Ceramic,Chip 50V 33pF ±5%	1
C313	CCD0275	C,Ceramic 500V 5pF ±0.25pF	1
C315	CCD0277	C,Ceramic 500V 10pF ±0.5pF	1
C321	CCG0138	C,Ceramic,Chip 50V 39pF ±5%	1
C322	CCG0211	C,Ceramic,Chip 50V 10000pF ±10%	1
C323	CCG0213	C,Ceramic,Chip 50V 0.1μF +80% -20%	1
C324	CES0133	C,Al Elyc 16V 47μF ±20%	1
C325	CES0133	C,Al Elyc 16V 47μF ±20%	1
C326	CES0252	C,Al Elyc 16V 10μF ±20% BP	1
C327	CCG0213	C,Ceramic,Chip 50V 0.1μF +80% -20%	1
C328	CES0133	C,Al Elyc 16V 47μF ±20%	1
C329	CCG0211	C,Ceramic,Chip 50V 10000pF ±10%	1
C331	CCG0176	C,Ceramic,Chip 50V 1pF ±0.25pF	1
C332	CES0133	C,Al Elyc 16V 47μF ±20%	1
C333	CES0133	C,Al Elyc 16V 47μF ±20%	1
C341	CCG0201	C,Ceramic,Chip 50V 470pF ±5%	1
C364	CCG0116	C,Ceramic,Chip 50V 5pF ±0.25pF	1
C366	CCG0211	C,Ceramic,Chip 50V 10000pF ±10%	1
C367	CCG0213	C,Ceramic,Chip 50V 0.1μF +80% -20%	1
C368	CCG0213	C,Ceramic,Chip 50V 0.1μF +80% -20%	1
C380	CES0378	C,Al Elyc 16V 330μF ±20%	1
C381	CES0379	C,Al Elyc 10V 470μF ±20%	1
C382	CES0378	C,Al Elyc 16V 330μF ±20%	1
C404	CES0133	C,Al Elyc 16V 47μF ±20%	1
C472	CCG0121	C,Ceramic,Chip 50V 7pF ±0.5pF	1
C473	CCG0121	C,Ceramic,Chip 50V 7pF ±0.5pF	1
C483	CCG0197	C,Ceramic,Chip 50V 180pF ±5%	1
C484	CCG0128	C,Ceramic,Chip 50V 15pF ±5%	1
C489	CES0133	C,Al Elyc 16V 47μF ±20%	1
C490	CCG0211	C,Ceramic,Chip 50V 10000pF ±10%	1
C491	CCG0122	C,Ceramic,Chip 50V 8pF ±0.5pF	1
C492	CCG0128	C,Ceramic,Chip 50V 15pF ±5%	1
C493	CCG0139	C,Ceramic,Chip 50V 47pF ±5%	1
C601	CCG0143	C,Ceramic,Chip 50V 100pF ±5%	1

SYMBOL	PART CODE	DESCRIPTION	Q'TY
C602	CCG0213	C,Ceramic,Chip 50V 0.1μF +80% -20%	1
C607	CCG0217	C,Ceramic,Chip 50V 0.047μF ±10%	1
C608	CES0252	C,Al Elyc 16V 10μF ±20% BP	1
C610	CCG0211	C,Ceramic,Chip 50V 10000pF ±10%	1
C611	CES0133	C,Al Elyc 16V 47μF ±20%	1
C620	CCG0211	C,Ceramic,Chip 50V 10000pF ±10%	1
C621	CCG0211	C,Ceramic,Chip 50V 10000pF ±10%	1
C622	CES0252	C,Al Elyc 16V 10μF ±20% BP	1
C625	CCG0211	C,Ceramic,Chip 50V 10000pF ±10%	1
C626	CCG0211	C,Ceramic,Chip 50V 10000pF ±10%	1
C627	CES0252	C,Al Elyc 16V 10μF ±20% BP	1
CV4	CVT0056	C,Variable TZ03Z100NR169 (10P)	1
CV5	CVT0053	C,Variable TZ03Z2R3NR169 (2.3P)	1
CV14	CVT0056	C,Variable TZ03Z100NR169 (10P)	1
CV15	CVT0053	C,Variable TZ03Z2R3NR169 (2.3P)	1
CV104	CVT0056	C,Variable TZ03Z100NR169 (10P)	1
CV105	CVT0053	C,Variable TZ03Z2R3NR169 (2.3P)	1
CV114	CVT0056	C,Variable TZ03Z100NR169 (10P)	1
CV115	CVT0053	C,Variable TZ03Z2R3NR169 (2.3P)	1
CV160	CVT0056	C,Variable TZ03Z100NR169 (10P)	1
CV305	CVT0053	C,Variable TZ03Z2R3NR169 (2.3P)	1
CV306	CVT0053	C,Variable TZ03Z2R3NR169 (2.3P)	1
CV307	CVT0057	C,Variable TZ03T100NR169 (20P)	1
D23	HDS0477	Diode 1SS110	1
D25	HDS0477	Diode 1SS110	1
D26	HDS0477	Diode 1SS110	1
D31	HDS0477	Diode 1SS110	1
D41	HDM0141	Diode MTZ7.5JC	1
D73	HDS0437	Diode 1SS133	1
D74	HDS0437	Diode 1SS133	1
D123	HDS0477	Diode 1SS110	1
D125	HDS0477	Diode 1SS110	1
D126	HDS0477	Diode 1SS110	1
D131	HDS0477	Diode 1SS110	1
D141	HDM0141	Diode MTZ7.5JC	1
D173	HDS0437	Diode 1SS133	1
D174	HDS0437	Diode 1SS133	1
D320	HDS0437	Diode 1SS133	1
D321	HDS0437	Diode 1SS133	1
D322	HDM0139	Diode MTZ 3.3JA	1
D365	HDS0437	Diode 1SS133	1
IC26	8397023 A	IC,Analog LF411CN	1
IC126	8397023 A	IC,Analog LF411CN	1
IC171	HTD0161	Transistor,Chip DTC124K	1
IC172	HTD0161	Transistor,Chip DTC124K	1
IC320	ILT0037	IC,Analog TL081CP	1
IC610	IDH0005	IC,Digital HD10116	1
JP1	RME0912	R,Metal,Chip 0Ω	1
JP2	RME0912	R,Metal,Chip 0Ω	1
JP3	RME0912	R,Metal,Chip 0Ω	1
JP4	RME0912	R,Metal,Chip 0Ω	1
JP5	RME0912	R,Metal,Chip 0Ω	1
JP6	RME0912	R,Metal,Chip 0Ω	1
JP7	RME0912	R,Metal,Chip 0Ω	1
JP8	RME0912	R,Metal,Chip 0Ω	1
JP9	RME0912	R,Metal,Chip 0Ω	1
JP10	RME0912	R,Metal,Chip 0Ω	1
JP12	RME0912	R,Metal,Chip 0Ω	1

SYMBOL	PART CODE	DESCRIPTION	Q'TY
JP13	RME0912	R,Metal,Chip 0Ω	1
JP14	RME0912	R,Metal,Chip 0Ω	1
JP15	RME0912	R,Metal,Chip 0Ω	1
JP16	RME0912	R,Metal,Chip 0Ω	1
JP17	RME0912	R,Metal,Chip 0Ω	1
JP19	RME0912	R,Metal,Chip 0Ω	1
JP20	RME0912	R,Metal,Chip 0Ω	1
L47	TLN0008	Coil 0.39μH 450mA ±20%	1
L94	TLN0006	Coil 4.7μH 220mA ±20%	1
L147	TLN0008	Coil 0.39μH 450mA ±20%	1
L194	TLN0006	Coil 4.7μH 220mA ±20%	1
L380	TLE0173	Coil ELO607SKI 101K (100μH)	1
L381	TLE0173	Coil ELO607SKI 101K (100μH)	1
L382	TLE0173	Coil ELO607SKI 101K (100μH)	1
P301	JBB0021	Connector B3B-XH-A	1
P490	JBB0021	Connector B3B-XH-A	1
P601	JBB0022	Connector B6B-XH-A	1
P5000	JBX2079	Connector 3022-02B	1
P5001	JBX2079	Connector 3022-02B	1
P5002	JBX2079	Connector 3022-02B	1
P5006	JBX2205	Connector 3022-15B	1
R2	RME0856	R,Metal,Chip 1/8W 22Ω ±5%	1
R3	RME0858	R,Metal,Chip 1/8W 33Ω ±5%	1
R4	RME0862	R,Metal,Chip 1/8W 68Ω ±5%	1
R5	RMS0043	R,Metal 1/4W 900kΩ ±0.5%	1
R6	RME1163	R,Metal 1/4W 111kΩ ±0.5%	1
R7	RME0865	R,Metal,Chip 1/8W 120Ω ±5%	1
R8	RME0858	R,Metal,Chip 1/8W 33Ω ±5%	1
R9	RME0873	R,Metal,Chip 1/8W 560Ω ±5%	1
R10	RME0852	R,Metal,Chip 1/8W 10Ω ±5%	1
R11	RME0864	R,Metal,Chip 1/8W 100Ω ±5%	1
R12	RME0888	R,Metal,Chip 1/8W 10kΩ ±5%	1
R13	RME0891	R,Metal,Chip 1/8W 18kΩ ±5%	1
R14	RME0853	R,Metal,Chip 1/8W 12Ω ±5%	1
R15	RMS0044	R,Metal 1/4W 990kΩ ±0.5%	1
R16	RME1156	R,Metal 1/4W10.1kΩ ±0.5%	1
R17	RME0866	R,Metal,Chip 1/8W 150Ω ±5%	1
R18	RME0852	R,Metal,Chip 1/8W 10Ω ±5%	1
R19	RME0851	R,Metal,Chip 1/8W 6.8Ω ±5%	1
R21	RME1168	R,Metal 1/4W 500kΩ ±0.5%	1
R22	RME1168	R,Metal 1/4W 500kΩ ±0.5%	1
R23	RME1597	R,Metal,Chip 1/8W 10MΩ ±5%	1
R24	RME0876	R,Metal,Chip 1/8W 1.0kΩ ±5%	1
R25	RME0860	R,Metal,Chip 1/8W 47Ω ±5%	1
R26	RME0868	R,Metal,Chip 1/8W 220Ω ±5%	1
R27	RME0886	R,Metal,Chip 1/8W 6.8kΩ ±5%	1
R28	RME0877	R,Metal,Chip 1/8W 1.2kΩ ±5%	1
R29	RME1591	R,Metal 1/4W26.7kΩ ±0.5%	1
R30	RME0888	R,Metal,Chip 1/8W 10kΩ ±5%	1
R31	RME0852	R,Metal,Chip 1/8W 10Ω ±5%	1
R33	RME1081	R,Metal 1/4W5.62kΩ ±1%	1
R34	RME0892	R,Metal,Chip 1/8W 10Ω ±5%	1
R37	RME1662	R,Metal 1/4W 301Ω ±0.5%	1
R38	RME0897	R,Metal,Chip 1/8W 56kΩ ±5%	1
R39	RCE0768	R,Carbon 1/4W 820Ω ±5%	1
R40	RME0880	R,Metal,Chip 1/8W 2.2kΩ ±5%	1
R41	RME0864	R,Metal,Chip 1/8W 100Ω ±5%	1
R42	RME1661	R,Metal 1/4W 100Ω ±0.5%	1
R43	RME0864	R,Metal,Chip 1/8W 100Ω ±5%	1
R44	RME0862	R,Metal,Chip 1/8W 68Ω ±5%	1

PART CODE	DESCRIPTION	Q'TY
RME1595	R,Metal 1/4W 475Ω ±0.5%	1
RME0878	R,Metal,Chip 1/8W 1.5kΩ ±5%	1
RME1663	R,Metal 1/4W 22.1Ω ±0.5%	1
RME0868	R,Metal,Chip 1/8W 220Ω ±5%	1
RME1157	R,Metal 1/4W16.0kΩ ±0.5%	1
RME1596	R,Metal 1/4W24.0kΩ ±0.5%	1
RME0870	R,Metal,Chip 1/8W 330Ω ±5%	1
RME0870	R,Metal,Chip 1/8W 330Ω ±5%	1
RME0865	R,Metal,Chip 1/8W 120Ω ±5%	1
RME1195	R,Metal 1/4W 110kΩ ±1%	1
RME0900	R,Metal,Chip 1/8W 100kΩ ±5%	1
RME0888	R,Metal,Chip 1/8W 10kΩ ±5%	1
RME1077	R,Metal 1/4W2.67kΩ ±1%	1
RME1077	R,Metal 1/4W2.67kΩ ±1%	1
RME1057	R,Metal 1/4W 56.2Ω ±1%	1
RME0866	R,Metal,Chip 1/8W 150Ω ±5%	1
RME0892	R,Metal,Chip 1/8W 22kΩ ±5%	1
RME0883	R,Metal,Chip 1/8W 3.9kΩ ±5%	1
RME0862	R,Metal,Chip 1/8W 68Ω ±5%	1
RME0854	R,Metal,Chip 1/8W 15Ω ±5%	1
RME0869	R,Metal,Chip 1/8W 270Ω ±5%	1
RME0854	R,Metal,Chip 1/8W 15Ω ±5%	1
RME0869	R,Metal,Chip 1/8W 270Ω ±5%	1
RME0912	R,Metal,Chip 0Ω	1
RME0860	R,Metal,Chip 1/8W 47Ω ±5%	1
RME0888	R,Metal,Chip 1/8W 10kΩ ±5%	1
RME0882	R,Metal,Chip 1/8W 3.3kΩ ±5%	1
RME0860	R,Metal,Chip 1/8W 47Ω ±5%	1
RME0856	R,Metal,Chip 1/8W 22Ω ±5%	1
RME0861	R,Metal,Chip 1/8W 56Ω ±5%	1
RME0861	R,Metal,Chip 1/8W 56Ω ±5%	1
RME0863	R,Metal,Chip 1/8W 82Ω ±5%	1
RME0864	R,Metal,Chip 1/8W 100Ω ±5%	1
RCE0770	R,Carbon 1/4W 1.2kΩ ±5%	1
RME0864	R,Metal,Chip 1/8W 100Ω ±5%	1
RME0883	R,Metal,Chip 1/8W 3.9kΩ ±5%	1
RME0856	R,Metal,Chip 1/8W 22Ω ±5%	1
RME0858	R,Metal,Chip 1/8W 33Ω ±5%	1
RME0862	R,Metal,Chip 1/8W 68Ω ±5%	1
RMS0043	R,Metal 1/4W 900kΩ ±0.5%	1
RME1163	R,Metal 1/4W 111kΩ ±0.5%	1
RME0865	R,Metal,Chip 1/8W 120Ω ±5%	1
RME0858	R,Metal,Chip 1/8W 33Ω ±5%	1
RME0873	R,Metal,Chip 1/8W 560Ω ±5%	1
RME0852	R,Metal,Chip 1/8W 10Ω ±5%	1
RME8064	R,Metal,Chip 1/8W 100Ω ±5%	1
RME0888	R,Metal,Chip 1/8W 10kΩ ±5%	1
RME0891	R,Metal,Chip 1/8W 18kΩ ±5%	1
RME0853	R,Metal,Chip 1/8W 12Ω ±5%	1
RMS0044	R,Metal 1/4W 990kΩ ±0.5%	1
RME1156	R,Metal 1/4W10.1kΩ ±0.5%	1
RME0866	R,Metal,Chip 1/8W 150Ω ±5%	1
RME0852	R,Metal,Chip 1/8W 10Ω ±5%	1
RME0851	R,Metal,Chip 1/8W 6.8Ω ±5%	1
RME1168	R,Metal 1/4W 500kΩ ±0.5%	1
RME1168	R,Metal 1/4W 500kΩ ±0.5%	1
RME1597	R,Metal,Chip 1/8W 10MΩ ±5%	1
RME0876	R,Metal,Chip 1/8W 1.0kΩ ±5%	1
RME0860	R,Metal,Chip 1/8W 47Ω ±5%	1
RME0868	R,Metal,Chip 1/8W 220Ω ±5%	1
RME0886	R,Metal,Chip 1/8W 6.8kΩ ±5%	1
RME0877	R,Metal,Chip 1/8W 1.2kΩ ±5%	1
RME1591	R,Metal 1/4W26.7kΩ ±0.5%	1

SYMBOL	PART CODE	DESCRIPTION	Q'TY
R130	RME0888	R,Metal,Chip 1/8W 10kΩ ±5%	1
R131	RME0852	R,Metal,Chip 1/8W 10Ω ±5%	1
R133	RME1081	R,Metal 1/4W5.62kΩ ±1%	1
R134	RME0892	R,Metal,Chip 1/8W 22kΩ ±5%	1
R137	RME1662	R,Metal 1/4W 301Ω ±0.5%	1
R138	RME0897	R,Metal,Chip 1/8W 56kΩ ±5%	1
R139	RCE0768	R,Carbon 1/4W 820Ω ±5%	1
R140	RME0880	R,Metal,Chip 1/8W 2.2kΩ ±5%	1
R141	RME0864	R,Metal,Chip 1/8W 100Ω ±5%	1
R142	RME1661	R,Metal 1/4W 100Ω ±0.5%	1
R143	RME0864	R,Metal,Chip 1/8W 100Ω ±5%	1
R144	RME0862	R,Metal,Chip 1/8W 68Ω ±5%	1
R145	RME1595	R,Metal 1/4W 475Ω ±0.5%	1
R146	RME0878	R,Metal,Chip 1/8W 1.5kΩ ±5%	1
R147	RME1663	R,Metal 1/4W 22.1Ω ±0.5%	1
R148	RME0868	R,Metal,Chip 1/8W 220Ω ±5%	1
R149	RME1157	R,Metal 1/4W16.0kΩ ±0.5%	1
R150	RME1596	R,Metal 1/4W24.0kΩ ±0.5%	1
R151	RME1870	R,Metal,Chip 1/8W 330Ω ±5%	1
R152	RME0870	R,Metal,Chip 1/8W 330Ω ±5%	1
R153	RME0865	R,Metal,Chip 1/8W 120Ω ±5%	1
R154	RME1195	R,Metal 1/4W 110kΩ ±1%	1
R155	RME0900	R,Metal,Chip 1/8W 100kΩ ±5%	1
R156	RME0888	R,Metal,Chip 1/8W 10kΩ ±5%	1
R157	RME1077	R,Metal 1/4W2.67kΩ ±1%	1
R158	RME1077	R,Metal 1/4W2.67kΩ ±1%	1
R159	RME0863	R,Metal,Chip 1/8W 82Ω ±5%	1
R160	RME0868	R,Metal,Chip 1/8W 220Ω ±5%	1
R162	RME0892	R,Metal,Chip 1/8W 22kΩ ±5%	1
R163	RME0883	R,Metal,Chip 1/8W 3.9kΩ ±5%	1
R164	RME0862	R,Metal,Chip 1/8W 68Ω ±5%	1
R165	RME0854	R,Metal,Chip 1/8W 15Ω ±5%	1
R166	RME0869	R,Metal,Chip 1/8W 270Ω ±5%	1
R167	RME0854	R,Metal,Chip 1/8W 15Ω ±5%	1
R168	RME0869	R,Metal,Chip 1/8W 270Ω ±5%	1
R169	RME0912	R,Metal,Chip 0Ω	1
R170	RME0863	R,Metal,Chip 1/8W 82Ω ±5%	1
R171	RME0860	R,Metal,Chip 1/8W 47Ω ±5%	1
R172	RME0861	R,Metal,Chip 1/8W 56Ω ±5%	1
R173	RME0860	R,Metal,Chip 1/8W 47Ω ±5%	1
R174	RME0888	R,Metal,Chip 1/8W 10kΩ ±5%	1
R175	RME0888	R,Metal,Chip 1/8W 10kΩ ±5%	1
R176	RME0882	R,Metal,Chip 1/8W 3.3kΩ ±5%	1
R177	RME0861	R,Metal,Chip 1/8W 56Ω ±5%	1
R178	RME0860	R,Metal,Chip 1/8W 47Ω ±5%	1
R191	RME0861	R,Metal,Chip 1/8W 56Ω ±5%	1
R192	RME0863	R,Metal,Chip 1/8W 82Ω ±5%	1
R193	RME0864	R,Metal,Chip 1/8W 100Ω ±5%	1
R194	RCE0770	R,Carbon 1/4W 1.2kΩ ±5%	1
R195	RME0864	R,Metal,Chip 1/8W 100Ω ±5%	1
R196	RME0883	R,Metal,Chip 1/8W 3.9kΩ ±5%	1
R303	RMS0049	R,Metal 1/2W 1MΩ ±0.5%	1
R304	RME0874	R,Metal,Chip 1/8W 680Ω ±5%	1
R305	RME0861	R,Metal,Chip 1/8W 56Ω ±5%	1
R306	RME0861	R,Metal,Chip 1/8W 56Ω ±5%	1
R307	RME0870	R,Metal,Chip 1/8W 330Ω ±5%	1
R310	RME0876	R,Metal,Chip 1/8W 1.0kΩ ±5%	1
R312	RMS0043	R,Metal 1/4W 900kΩ ±0.5%	1
R313	RME0872	R,Metal,Chip 1/8W 470Ω ±5%	1
R314	RME0875	R,Metal,Chip 1/8W 820Ω ±5%	1
R315	RME0852	R,Metal,Chip 1/8W 10Ω ±5%	1
R319	RME0884	R,Metal,Chip 1/8W 4.7kΩ ±5%	1
R320	RME0906	R,Metal,Chip 1/8W 1.0MΩ ±5%	1

SYMBOL	PART CODE	DESCRIPTION	Q'TY
R321	RME0867	R,Metal,Chip 1/8W 180Ω ±5%	1
R322	RME0860	R,Metal,Chip 1/8W 47Ω ±5%	1
R323	RME0876	R,Metal,Chip 1/8W 1.0kΩ ±5%	1
R325	RME0876	R,Metal,Chip 1/8W 1.0kΩ ±5%	1
R326	RME0880	R,Metal,Chip 1/8W 2.2kΩ ±5%	1
R328	RME0864	R,Metal,Chip 1/8W 100Ω ±5%	1
R329	RME0892	R,Metal,Chip 1/8W 22kΩ ±5%	1
R331	RME0856	R,Metal,Chip 1/8W 22Ω ±5%	1
R332	RME0877	R,Metal,Chip 1/8W 1.2kΩ ±5%	1
R333	RME0906	R,Metal,Chip 1/8W 1.0MΩ ±5%	1
R334	RME0886	R,Metal,Chip 1/8W 6.8kΩ ±5%	1
R335	RME0906	R,Metal,Chip 1/8W 1.0MΩ ±5%	1
R336	RME0860	R,Metal,Chip 1/8W 47Ω ±5%	1
R340	RME0912	R,Metal,Chip 0Ω	1
R341	RME0891	R,Metal,Chip 1/8W 18kΩ ±5%	1
R342	RME0892	R,Metal,Chip 1/8W 22kΩ ±5%	1
R350	RME1664	R,Metal 1/4W 600kΩ ±0.5%	1
R352	RME1163	R,Metal 1/4W 111kΩ ±0.5%	1
R360	RME1072	R,Metal 1/4W1.00kΩ ±1%	1
R361	RME0877	R,Metal,Chip 1/8W 1.2kΩ ±5%	1
R362	RME0880	R,Metal,Chip 1/8W 2.2kΩ ±5%	1
R363	RME1094	R,Metal 1/4W68.1kΩ ±1%	1
R364	RME1075	R,Metal 1/4W1.82kΩ ±1%	1
R366	RCE0769	R,Carbon 1/4W 1kΩ ±5%	1
R367	RME1060	R,Metal 1/4W 100Ω ±1%	1
R368	RME1060	R,Metal 1/4W 100Ω ±1%	1
R369	RCE0757	R,Carbon 1/4W 100Ω ±5%	1
R370	RME0870	R,Metal,Chip 1/8W 330Ω ±5%	1
R472	RME0852	R,Metal,Chip 1/8W 10Ω ±5%	1
R473	RME0852	R,Metal,Chip 1/8W 10Ω ±5%	1
R475	RME1064	R,Metal 1/4W 221Ω ±1%	1
R476	RME1223	R,Metal 1/4W 432Ω ±1%	1
R477	RME1064	R,Metal 1/4W 221Ω ±1%	1
R478	RME0882	R,Metal,Chip 1/8W 3.3kΩ ±5%	1
R479	RME0870	R,Metal,Chip 1/8W 330Ω ±5%	1
R480	RCE0767	R,Carbon 1/4W 680Ω ±5%	1
R481	RME0877	R,Metal 1/4W 1.2kΩ ±5%	1
R482	RME0877	R,Metal,Chip 1/8W 1.2kΩ ±5%	1
R483	RME0882	R,Metal,Chip 1/8W 3.3kΩ ±5%	1
R484	RME0876	R,Metal,Chip 1/8W 1kΩ ±5%	1
R485	RCE0757	R,Carbon 1/4W 100kΩ ±5%	1
R486	RME1071	R,Metal 1/4W 825Ω ±1%	1
R487	RME1071	R,Metal 1/4W 825Ω ±1%	1
R488	RME1106	R,Metal 1/4W 75.0Ω ±1%	1
R489	RME1106	R,Metal 1/4W 75.0Ω ±1%	1
R490	RCE0768	R,Carbon 1/4W 820Ω ±5%	1
R491	RME0862	R,Metal,Chip 1/8W 68Ω ±5%	1
R492	RME0861	R,Metal,Chip 1/8W 56Ω ±5%	1
R493	RME0879	R,Metal,Chip 1/8W 1.8kΩ ±5%	1
R601	RME0864	R,Metal,Chip 1/8W 100Ω ±5%	1
R602	RME0873	R,Metal,Chip 1/8W 560Ω ±5%	1
R603	RME0873	R,Metal,Chip 1/8W 560Ω ±5%	1
R604	RME0864	R,Metal,Chip 1/8W 100Ω ±5%	1
R605	RME0864	R,Metal,Chip 1/8W 100Ω ±5%	1
R606	RME0878	R,Metal,Chip 1/8W 1.5kΩ ±5%	1
R607	RME0860	R,Metal,Chip 1/8W 47Ω ±5%	1
R608	RME0903	R,Metal,Chip 1/8W 330kΩ ±5%	1
R610	RME0852	R,Metal,Chip 1/8W 10Ω ±5%	1
R611	RME0867	R,Metal,Chip 1/8W 180Ω ±5%	1
R612	RME1072	R,Metal 1/4W1.00kΩ ±1%	1
R613	RME1072	R,Metal 1/4W1.00kΩ ±1%	1
R614	RME0872	R,Metal,Chip 1/8W 470Ω ±5%	1
R615	RME0872	R,Metal,Chip 1/8W 470Ω ±5%	1

SYMBOL	PART CODE	DESCRIPTION	Q'TY
R616	RME0874	R,Metal,Chip 1/8W 680Ω ±5%	1
R617	RME0874	R,Metal,Chip 1/8W 680Ω ±5%	1
R618	RME0863	R,Metal,Chip 1/8W 82Ω ±5%	1
R619	RME0863	R,Metal,Chip 1/8W 82Ω ±5%	1
R620	RME0891	R,Metal,Chip 1/8W 18kΩ ±5%	2
R621	RME0852	R,Metal,Chip 1/8W 10Ω ±5%	1
R622	RME0904	R,Metal,Chip 1/8W 470kΩ ±5%	1
R623	RME0873	R,Metal,Chip 1/8W 560Ω ±5%	1
R624	RME0873	R,Metal,Chip 1/8W 560Ω ±5%	1
R625	RME0891	R,Metal,Chip 1/8W 18kΩ ±5%	1
R626	RME0852	R,Metal,Chip 1/8W 10Ω ±5%	1
R627	RME0904	R,Metal,Chip 1/8W 470kΩ ±5%	1
RM52	3203299	R,Network FOR 2ND ATT	1
RM152	3203299	R,Network FOR 2ND ATT	1
RV30	RNE0051	VR,Metal EVN 39C00YB14(10k)	1
RV37	RNE0047	VR,Metal EVN 39C00YB54(50k)	1
RV62	RNE0047	VR,Metal EVN 39C00YB54(50k)	1
RV130	RNE0051	VR,Metal EVN 39C00YB14(10k)	1
RV133	RNE0048	VR,Metal EVN 39C00YB22(200)	1
RV137	RNE0047	VR,Metal EVN 39C00YB54(50k)	1
RV162	RNE0047	VR,Metal EVN 39C00YB54(50k)	1
RV320	RNE0047	VR,Metal EVN 39C00YB54(50k)	1
S1	SSP0574	SW,Push SPU-1	1
S2	8472813B	SW,Rotary ADR255S18R11PY02 (w. S5)	1
S11	SSP0574	SW,Push SPUJ-1	1
S101	SSP0574	SW,Push SPUJ-1	1
S102	8472813B	SW,Rotary ADR255S18R11PY02 (w. S5)	1
S111	SSP0574	SW,Push SPUJ-1	1
S301	SSR0311	SW,Rotary SRRZS4	1
TR25	HTK0127	Transistor,Chip 2SK508 K52	1
TR28	HTC0871	Transistor,Chip 2SC3772LY4	1
TR40	HTA0318	Transistor,Chip 2SA1462Y34	1
TR41	HTC0871	Transistor,Chip 2SC3772LY4	1
TR42	HTC0871	Transistor,Chip 2SC3772LY4	1
TR57	HTC0871	Transistor,Chip 2SC3772LY4	1
TR58	HTC0871	Transistor,Chip 2SC3772LY4	1
TR71	HTC0871	Transistor,Chip 2SC3772LY4	1
TR72	HTC0871	Transistor,Chip 2SC3772LY4	1
TR93	HTC0871	Transistor,Chip 2SC3772LY4	1
TR125	HTK0127	Transistor,Chip 2SK508 K52	1
TR128	HTC0871	Transistor,Chip 2SC3772LY4	1
TR140	HTA0318	Transistor,Chip 2SA1462Y34	1
TR141	HTC0871	Transistor,Chip 2SC3772LY4	1
TR142	HTC0871	Transistor,Chip 2SC3772LY4	1
TR157	HTC0871	Transistor,Chip 2SC3772LY4	1
TR158	HTC0871	Transistor,Chip 2SC3772LY4	1
TR171	HTC0871	Transistor,Chip 2SC3772LY4	1
TR172	HTC0871	Transistor,Chip 2SC3772LY4	1
TR175	HTC0871	Transistor,Chip 2SC3772LY4	1
TR176	HTC0871	Transistor,Chip 2SC3772LY4	1
TR193	HTC0871	Transistor,Chip 2SC3772LY4	1
TR320	HTK0127	Transistor,Chip 2SK508 K52	1
TR325	HTC0871	Transistor,Chip 2SC3772LY4	1
TR330	HTC0871	Transistor,Chip 2SC3772LY4	1
TR362	HTC0686	Transistor,Chip 2SC2462LC	1
TR363	HTC0686	Transistor,Chip 2SC2462LC	1
TR365	HTC0686	Transistor,Chip 2SC2462LC	1
TR475	HTA0344	Transistor,Chip 2SA1245	1
TR476	HTA0344	Transistor,Chip 2SA1245	1

PART CODE	DESCRIPTION	Q'TY
HTA0318	Transistor,Chip 2SA1462Y34	1
HTA0318	Transistor,Chip 2SA1462Y34	1
HTA0318	Transistor,Chip 2SA1462Y34	1
HTC0872	Transistor,Chip 2SC2620QC	1
HTC0872	Transistor,Chip 2SC2620QC	1
HTC0872	Transistor,Chip 2SC2620QC	1
HTA0334	Transistor,Chip 2SA1226E4	1
HTA0334	Transistor,Chip 2SA1226E4	1
HTC0872	Transistor,Chip 2SC2620QC	1

782 SWP LOGIC

PART CODE	DESCRIPTION	Q'TY
ETP0141	Pin DP-2	1
ETP0141	Pin DP-2	1
ETP0141	Pin DP-2	1
ETP0141	Pin DP-2	1
ETP0141	Pin DP-2	1
ETP0141	Pin DP-2	1
CES0252	C,Al Elyc 16V 10µF ±20% BP	1
CES0378	C,Al Elyc 16V 330µF ±20%	1
CCG0209	C,Ceramic,Chip 50V 4700pF ±10%	1
CCG0211	C,Ceramic,Chip 50V 10000pF ±10%	1
CCG0143	C,Ceramic,Chip 50V 100pF ±5%	1
CCG0211	C,Ceramic,Chip 50V 10000pF ±10%	1
CCG0211	C,Ceramic,Chip 50V 10000pF ±10%	1
CCG0211	C,Ceramic,Chip 50V 10000pF ±10%	1
CCG0211	C,Ceramic,Chip 50V 10000pF ±10%	1
CCG0211	C,Ceramic,Chip 50V 10000pF ±10%	1
CQA0129	C,Plastic 50V 0.022µF ±10%	1
CCG0141	C,Ceramic,Chip 50V 68pF ±5%	1
CES0133	C,Al Elyc 16V 47µF ±20%	1
CCG0211	C,Ceramic,Chip 50V 10000pF ±10%	1
CES0133	C,Al Elyc 16V 47µF ±20%	1
CCG0211	C,Ceramic,Chip 50V 10000pF ±10%	1
CMV0053	C,Plastic 50V 180pF ±5%	1
CCG0211	C,Ceramic,Chip 50V 10000pF ±10%	1
CCG0130	C,Ceramic,Chip 50V 18pF ±5%	1
CCG0132	C,Ceramic,Chip 50V 22pF ±5%	1
CCG0211	C,Ceramic,Chip 50V 10000pF ±10%	1
CQE0049	C,Plastic 100V 1µF ±5%	1
CCG0211	C,Ceramic,Chip 50V 10000pF ±10%	1
CCG0211	C,Ceramic,Chip 50V 10000pF ±10%	1
CCG0132	C,Ceramic,Chip 50V 22pF ±5%	1
CCG0124	C,Ceramic,Chip 50V 10pF ±0.5pF	1
CCG0144	C,Ceramic,Chip 50V 220pF ±5%	1
CCG0211	C,Ceramic,Chip 50V 10000pF ±10%	1
CCG0211	C,Ceramic,Chip 50V 10000pF ±10%	1
CES0378	C,Al Elyc 16V 330µF ±20%	1
CES0378	C,Al Elyc 16V 330µF ±20%	1

SYMBOL	PART CODE	DESCRIPTION	Q'TY
C803	CES0133	C,Al Elyc 16V 47µF ±20%	1
C804	CCG0116	C,Ceramic,Chip 50V 2pF ±0.25pF	1
C805	CES0133	C,Al Elyc 16V 47µF ±20%	1
C807	CES0131	C,Al Elyc 16V 10µF ±20%	1
C813	CES0133	C,Al Elyc 16V 47µF ±20%	1
C815	CCG0211	C,Ceramic,Chip 50V 10000pF ±10%	1
C818	CES0133	C,Al Elyc 16V 47µF ±20%	1
C821	CCG0116	C,Ceramic,Chip 50V 2pF ±0.25pF	1
C822	CCG0116	C,Ceramic,Chip 50V 2pF ±0.25pF	1
C825	CET0033	C,Al Elyc 160V 1µF ±20%	1
C826	CCG0176	C,Ceramic,Chip 50V 1pF ±0.25pF	1
C843	CCG0143	C,Ceramic,Chip 50V 100pF ±5%	1
C861	CCG0213	C,Ceramic,Chip 50V 0.1µF +80% -20%	1
C862	CET0033	C,Al Elyc 160V 1µF ±20%	1
C872	CCG0199	C,Ceramic,Chip 50V 330pF ±5%	1
C1101	CCG0211	C,Ceramic,Chip 20V 10000pF ±10%	1
C1102	CCG0124	C,Ceramic,Chip 50V 10pF ±0.5pF	1
C1105	CCG0139	C,Ceramic,Chip 50V 47pF ±5%	1
C1106	CCG0193	C,Ceramic,Chip 50V 150pF ±5%	1
C1109	CCG0199	C,Ceramic,Chip 50V 330pF ±5%	1
C1111	CCG0211	C,Ceramic,Chip 50V 10000pF ±10%	1
C1121	CCG0211	C,Ceramic,Chip 50V 10000pF ±10%	1
C1124	CCG0296	C,Ceramic,Chip 50V 1000pF ±5%	1
C1225	CCG0296	C,Ceramic,Chip 50V 1000pF ±5%	1
C1226	CCG0199	C,Ceramic,Chip 50V 330pF ±5%	1
C1127	CCG0296	C,Ceramic,Chip 50V 1000pF ±5%	1
C2100	CQA0121	C,Plastic 50V 33000pF ±10%	1
C2101	CES0133	C,Al Elyc 16V 47µF ±20%	1
C2107	CCE0211	C,Ceramic 50V 10000pF ±10%	1
C2108	CES0133	C,Al Elyc 16V 47µF ±20%	1
C2110	CES0133	C,Al Elyc 16V 47µF ±20%	1
C2130	CCG0211	C,Ceramic,Chip 50V 10000pF ±10%	1
C2131	CCG0211	C,Ceramic,Chip 50V 10000pF ±10%	1
C2142	CCG0205	C,Ceramic,Chip 50V 1000pF ±10%	1
C2143	CCG0213	C,Ceramic,Chip 50V 0.1µF +80% -20%	1
C2144	CCG0205	C,Ceramic,Chip 50V 1000pF ±10%	1
C2144A	CCG0201	C,Ceramic,Chip 50V 470pF ±5%	1
C2146	CCG0209	C,Ceramic,Chip 50V 4700pF ±10%	1
C2150	CCG0213	C,Ceramic,Chip 50V 0.1µF +80% -20%	1
C2151	CCG0213	C,Ceramic,Chip 50V 0.1µF +80% -20%	1
C2153	CQE0062	C,Plastic 50V 1µF ±5%	1
C2154	CQE0062	C,Plastic 50V 1µF ±5%	1
C2155	CEK0186	C,Al Elyc 50V 4.7µF ±20%	1
C2156	CCG0124	C,Ceramic,Chip 50V 10pF ±5%	1
C2157	CCG0211	C,Ceramic,Chip 50V 10000pF ±10%	1
C2160	CCG0211	C,Ceramic,Chip 50V 10000pF ±10%	1
C2161	CCG0211	C,Ceramic,Chip 50V 10000pF ±10%	1
C2162	CCG0211	C,Ceramic,Chip 50V 10000pF ±10%	1
C2163	CCG0143	C,Ceramic,Chip 50V 100pF ±5%	1
C2164	CCG0143	C,Ceramic,Chip 50V 100pF ±5%	1
C2165	CCG0211	C,Ceramic,Chip 50V 10000pF ±10%	1
C2166	CCG0211	C,Ceramic,Chip 50V 10000pF ±10%	1
C2168	CES0133	C,Al Elyc 16V 47µF ±20%	1
C2170	CCG0213	C,Ceramic,Chip 50V 0.1µF +80% -20%	1
C2171	CCG0211	C,Ceramic,Chip 50V 10000pF ±10%	1
C2201	CES0033	C,Al Elyc 25V 100µF ±20%	1
C2202	CES0133	C,Al Elyc 16V 47µF ±20%	1
C2210	CCG0296	C,Ceramic,Chip 50V 1000pF ±5%	1

SYMBOL	PART CODE	DESCRIPTION	Q'TY
C2211	CCG0211	C,Ceramic,Chip 50V 10000pF ±10%	1
C2212	CCG0211	C,Ceramic,Chip 50V 10000pF ±10%	1
C2215	CCG0296	C,Ceramic,Chip 50V 1000pF ±5%	1
C2220	CCG0211	C,Ceramic,Chip 50V 10000pF ±10%	1
C2221	CCG0211	C,Ceramic,Chip 50V 10000pF ±10%	1
C2230	CES0133	C,Al Elyc 16V 47μF ±20%	1
C2231	CES0133	C,Al Elyc 16V 47μF ±20%	1
C2247	CES0133	C,Al Elyc 16V 47μF ±20%	1
C2248	CCG0211	C,Ceramic,Chip 50V 10000pF ±10%	1
C2249	CQA0124	C,Plastic 50V 0.1μF ±10%	1
C4001	CQG0211	C,Ceramic,Chip 50V 10000pF ±10%	1
D630	HDM0140	Diode MTZ 4.7JB	1
D631	HDX0055	Diode 1SS165	1
D632	HDS0437	Diode 1SS133	1
D633	HDS0437	Diode 1SS133	1
D660	HDS0437	Diode 1SS133	1
D661	HDS0437	Diode 1SS133	1
D662	HDS0437	Diode 1SS133	1
D663	HDS0437	Diode 1SS133	1
D664	HDS0437	Diode 1SS133	1
D665	HDS0437	Diode 1SS133	1
D666	HDS0437	Diode 1SS133	1
D668	HDS0437	Diode 1SS133	1
D670	HDS0437	Diode 1SS133	1
D675	HDS0437	Diode 1SS133	1
D685	HDS0437	Diode 1SS133	1
D692	HDS0437	Diode 1SS133	1
D710	HDM0051	Diode MA161	1
D711	HDS0576	Diode 1SS286	1
D712	HDS0576	Diode 1SS286	1
D723	HDS0437	Diode 1SS133	1
D724	HDS0228	Diode HZ7A1	1
D740	HDM0139	Diode MTZ 3.3JA	1
D841	HDZ0055	Diode 1SS165	1
D842	HDX0055	Diode 1SS165	1
D867	HDM0141	Diode MTZ 7.5JC	1
D1101	HDS0437	Diode 1SS133	1
D1102	HDS0437	Diode 1SS133	1
D1103	HDS0437	Diode 1SS133	1
D1104	HDS0437	Diode 1SS133	1
D1105	HDS0437	Diode 1SS133	1
D1113	HDS0055	Diode 1SS165	1
D1114	HDS0437	Diode 1SS133	1
D1115	HDS0055	Diode 1SS165	1
D1116	HDS0437	Diode 1SS133	1
D2107	HDS0437	Diode 1SS133	1
D2108	HDM0176	Diode MTZ6.8JC	1
D2155	HDS0437	Diode 1SS133	1
D2165	HDS0437	Diode 1SS133	1
D2166	HDS0437	Diode 1SS133	1
D2212	HDS0437	Diode 1SS133	1
IC659	IDS0444	IC,Digital SN74AS00N	1
IC660	IDS0455	IC,Digital SN74AS74N	1
IC661	IDH0982	IC,Digital HD74HC00P(TC74HC00P)	1
IC670	ILM0431	IC,Analog M5201L	1
IC680	ILM0431	IC,Analog M5201L	1
IC694	HTD0160	Transistor,Chip DTA124S	1
IC716	HTD0161	Transistor,Chip DTC124K	1
IC717	IDM0706	IC,Digital MC74HC4053N	1
IC730	ILN0042	IC,Analog NJM 072S	1
IC738	HTD0161	Transistor,Chip DTC124K	1

SYMBOL	PART CODE	DESCRIPTION	Q'TY
IC864	HTD0161	Transistor,Chip DTC124K	1
IC1101	IDH0475	IC,Digital HD74LS10P	1
IC1111	IDH0471	IC,Digital HD74LS04P	1
IC1121	IDH0467	IC,Digital HD74LS00P	1
IC2107	IDH0467	IC,Digital HD74LS00P	1
IC2108	HTC0590	Transistor,Chip 2SC1621B4	1
IC2109	HTC0590	Transistor,Chip 2SC1621B4	1
IC2130	IDH0800	IC,Digital HD14051BP(MC14051BCP)	1
IC2150	ILT0045	IC,Analog TL064CN	1
IC2160	IDH0586	IC,Digital HD74LS4AP	1
IC2161	IDT0096	IC,Digital TC40H151P	1
IC2162	IDH0467	IC,Digital HD74LS00P	1
IC2165	IDS0479	IC,Digital SN74LS594N	1
IC2166	IDT0049	IC,Digital TC40H164P	1
IC2170	IDS0455	IC,Digital SN74AS74N	1
IC2171	IDH0914	IC,Digital HD74LS393P	1
IC2201	ILT0091	IC,Analog TL431CLP-B	1
IC2211	IDT0047	IC,Digital TC40H002P	1
IC2212	IDH0795	IC,Digital HD14040BP(MC14040BCP)	1
IC2220	IDM0704	IC,Digital MC74HC4052N	1
IC2230	ILN0042	IC,Analog MJM072S	1
IC2230A	ILN0042	IC,Analog NJM072S	1
IC2248	IDT0039	IC,Digital TC40H000P	1
IC4001	IDH0630	IC,Digital HD74LS157P	1
L643	TLE0084	Coil EL0606SKI 1ROM	1
L645	TLN0005	Coil 0.22μH 450mA ±20%	1
L801	TLE0172	Coil EL0607SKI 470K (47μH)	1
L802	TLE0172	Coil EL0607SKI 470K (47μH)	1
L2163	TLE0058	Coil EL0606SKI 100K (10μH)	1
L2164	TLE0058	Coil EL0606SKI 100K (10μH)	1
L2170	TLN0006	Coil NL3225224R7M (4.7μH)	1
P2003	JBB0076	Connector B10P-SHF-GB	1
P2004	JBB0031	Connector B8P-SHF-GB	1
P2115	JBB0022	Connector B6B-XH-A	1
P2117	JBB0027	Connector B2B-XH-A	1
P2118	JBB0027	Connector B2B-XH-A	1
P2601	JBB0024	Connector B15B-XH-A	1
P2602	JBB0026	Connector B10B-XH-A	1
P2603	JBB0026	Connector B10B-XH-A	1
P2604	JBB0022	Connector B6B-XH-A	1
P2605	JBB0021	Connector B3B-XH-A	1
P2610	JBB0024	Connector B15B-XH-A	1
P2611	JBB0060	Connector B5B-XH-A	1
P3101	JBB0031	Connector B8P-SHF-GB	1
P3102	JBB0031	Connector B8P-SHF-GB	1
P3103	JBB0031	Connector B8P-SHF-GB	1
P3104	JBB0031	Connector B8P-SHF-GB	1
P3105	JBB0031	Connector B8P-SHF-GB	1
P3106	JBB0031	Connector B8P-SHF-GB	1
P3107	JBB0031	Connector B8P-SHF-GB	1
P3108	JBB0031	Connector B8P-SHF-GB	1
P4001	JBB0028	Connector B4B-XH-A	1
P4002	JBB0026	Connector B10B-XH-A	1
R630	RME0869	R,Metal,Chip 1/8W 270Ω ±5%	1
R631	RME0894	R,Metal,Chip 1/8W 33kΩ ±5%	1
R632	RME0880	R,Metal,Chip 1/8W 2.2kΩ ±5%	1
R633	RME0892	R,Metal,Chip 1/8W 22kΩ ±5%	1
R634	RME0880	R,Metal,Chip 1/8W 2.2kΩ ±5%	1
R635	RME0864	R,Metal,Chip 1/8W 100Ω ±5%	1
R636	RME0882	R,Metal,Chip 1/8W 3.3kΩ ±5%	1

PART CODE	DESCRIPTION	Q'TY
RME0885	R,Metal,Chip 1/8W 5.6kΩ ±5%	1
RME0895	R,Metal,Chip 1/8W 39kΩ ±5%	1
RME0876	R,Metal,Chip 1/8W 1.0kΩ ±5%	1
RME0865	R,Metal,Chip 1/8W 120Ω ±5%	1
RME0865	R,Metal,Chip 1/8W 120Ω ±5%	1
RME1191	R,Metal 1/4W 432Ω ±1%	1
RME0872	R,Metal,Chip 1/8W 470Ω ±5%	1
RME0872	R,Metal,Chip 1/8W 470Ω ±5%	1
RME0856	R,Metal,Chip 1/8W 22Ω ±5%	1
RME0865	R,Metal,Chip 1/8W 120Ω ±5%	1
RME0878	R,Metal,Chip 1/8W 1.5kΩ ±5%	1
RME0852	R,Metal,Chip 1/8W 10Ω ±5%	1
RME0852	R,Metal,Chip 1/8W 10Ω ±5%	1
RME0852	R,Metal,Chip 1/8W 10Ω ±5%	1
RME0884	R,Metal,Chip 1/8W 4.7kΩ ±5%	1
RME0884	R,Metal,Chip 1/8W 4.7kΩ ±5%	1
RME0884	R,Metal,Chip 1/8W 4.7kΩ ±5%	1
RME0896	R,Metal,Chip 1/8W 47kΩ ±5%	1
RME0892	R,Metal,Chip 1/8W 22kΩ ±5%	1
RME0881	R,Metal,Chip 1/8W 2.7kΩ ±5%	1
RME0878	R,Metal,Chip 1/8W 1.5kΩ ±5%	1
RME1715	R,Metal,Chip 1/8W 4.7MΩ ±10%	1
RME0884	R,Metal,Chip 1/8W 4.7kΩ ±5%	1
RME0880	R,Metal,Chip 1/8W 2.2kΩ ±5%	1
RME0882	R,Metal,Chip 1/8W 3.3kΩ ±5%	1
RME0882	R,Metal,Chip 1/8W 3.3kΩ ±5%	1
RME0894	R,Metal,Chip 1/8W 33kΩ ±5%	1
RME0876	R,Metal,Chip 1/8W 1.0kΩ ±5%	1
RME0890	R,Metal,Chip 1/8W 15kΩ ±5%	1
RME0901	R,Metal,Chip 1/8W 150kΩ ±5%	1
RME0884	R,Metal,Chip 1/8W 4.7kΩ ±5%	1
RME0868	R,Metal,Chip 1/8W 220Ω ±5%	1
RME0894	R,Metal,Chip 1/8W 33kΩ ±5%	1
RME0876	R,Metal,Chip 1/8W 1.0kΩ ±5%	1
RME0890	R,Metal,Chip 1/8W 15kΩ ±5%	1
RME0901	R,Metal,Chip 1/8W 150kΩ ±5%	1
RME0884	R,Metal,Chip 1/8W 4.7kΩ ±5%	1
RME0868	R,Metal,Chip 1/8W 220Ω ±5%	1
RME0880	R,Metal,Chip 1/8W 2.2kΩ ±5%	1
RME0884	R,Metal,Chip 1/8W 4.7kΩ ±5%	1
RME0888	R,Metal,Chip 1/8W 10kΩ ±5%	1
RME0856	R,Metal,Chip 1/8W 22Ω ±5%	1
RME0860	R,Metal,Chip 1/8W 47Ω ±5%	1
RME0874	R,Metal,Chip 1/8W 680Ω ±5%	1
RME0872	R,Metal,Chip 1/8W 470Ω ±5%	1
RME0869	R,Metal,Chip 1/8W 270Ω ±5%	1
RME0880	R,Metal,Chip 1/8W 2.2kΩ ±5%	1
RME0890	R,Metal,Chip 1/8W 15kΩ ±5%	1
RME0852	R,Metal,Chip 1/8W 10Ω ±5%	1
RME0882	R,Metal,Chip 1/8W 3.3kΩ ±5%	1
RME0886	R,Metal,Chip 1/8W 6.8kΩ ±5%	1
RME0864	R,Metal,Chip 1/8W 100Ω ±5%	1
RME0882	R,Metal,Chip 1/8W 3.3kΩ ±5%	1
RME0886	R,Metal,Chip 1/8w 6.8kΩ ±5%	1
RME0852	R,Metal,Chip 1/8W 10Ω ±5%	1
RME0888	R,Metal,Chip 1/8W 10kΩ ±5%	1
RME0888	R,Metal,Chip 1/8w 10kΩ ±5%	1
RME0858	R,Metal,Chip 1/8W 33Ω ±5%	1
RCE0704	R,Carbon 1/2W 820Ω ±5%	1
RME0888	R,Metal,Chip 1/8W 10kΩ ±5%	1
RME0888	R,Metal,Chip 1/8W 10kΩ ±5%	1
RME0876	R,Metal,Chip 1/8W 1.0kΩ ±5%	1
RME0888	R,Metal,Chip 1/8W 10kΩ ±5%	1

SYMBOL	PART CODE	DESCRIPTION	Q'TY
R719	RME0888	R,Metal,Chip 1/8W 10kΩ ±5%	1
R720	RME1080	R,Metal 1/4W 4.75kΩ ±1%	1
R721	RME1080	R,Metal 1/4W 4.75kΩ ±1%	1
R722	RME0872	R,Metal,Chip 1/8W 470Ω ±5%	1
R722A	RME0884	R,Metal,Chip 1/8W 4.7kΩ ±5%	1
R723	RME0888	R,Metal,Chip 1/8W 10kΩ ±5%	1
R723A	RME0880	R,Metal,Chip 1/8W 2.2kΩ ±5%	1
R724	RME0878	R,Metal,Chip 1/8W 1.5kΩ ±5%	1
R725	RME0898	R,Metal,Chip 1/8W 68kΩ ±5%	1
R732	RME1078	R,Metal 1/4W 3.32kΩ ±1%	1
R733	RME1174	R,Metal 1/4W 2.00kΩ ±1%	1
R734	RME0852	R,Metal,Chip 1/8W 10Ω ±5%	1
R735	RME0852	R,Metal,Chip 1/8W 10Ω ±5%	1
R736	RME0864	R,Metal,Chip 1/8W 100Ω ±5%	1
R737	RME0864	R,Metal,Chip 1/8W 100Ω ±5%	1
R738	RME0888	R,Metal,Chip 1/8W 10kΩ ±5%	1
R738A	RME0888	R,Metal,Chip 1/8W 10kΩ ±5%	1
R740	RME1710	R,Metal 1/4W 1.0MΩ ±0.5%	1
R740A	RME0882	R,Metal,Chip 1/8W 3.3kΩ ±5%	1
R741	RME1163	R,Metal 1/4W 111kΩ ±0.5%	1
R742	RME0887	R,Metal,Chip 1/8W 8.2kΩ ±5%	1
R743	RME1156	R,Metal 1/4w 10.1kΩ ±0.5%	1
R744	RME0887	R,Metal,Chip 1/8W 8.2kΩ ±5%	1
R745	RME1711	R,Metal 1/4W 1.00kΩ ±0.5%	1
R746	RME0887	R,Metal,Chip 1/8W 8.2kΩ ±5%	1
R750	RME0882	R,Metal,Chip 1/8W 3.3kΩ ±5%	1
R751	RME0882	R,Metal,Chip 1/8W 3.3kΩ ±5%	1
R752	RME0882	R,Metal,Chip 1/8W 3.3kΩ ±5%	1
R801	RCE774	R,Carbon 1/4W 3.3kΩ ±5%	1
R801A	RME0865	R,Metal,Chip 1/8W 120Ω ±5%	1
R802	RME0863	R,Metal,Chip 1/8W 82Ω ±5%	1
R803	RME1412	R,Metal 1/4W 4.32kΩ ±1%	1
R804	RME1412	R,Metal 1/4W 4.32kΩ ±1%	1
R805	RME1073	R,Metal 1/4W 1.21kΩ ±1%	1
R806	RME1070	R,Metal 1/4W 681Ω ±1%	1
R807	RME0890	R,Metal,Chip 1/8W 15kΩ ±5%	1
R808	RME0889	R,Metal,Chip 1/8W 12kΩ ±5%	1
R811	RME1058	R,Metal 1/4W 68.1Ω ±1%	1
R812	RME1123	R,Metal 1/4W 2.43kΩ ±1%	1
R813	RME1072	R,Metal 1/4W 1.00kΩ ±1%	1
R815	RME0884	R,Metal,Chip 1/8W 4.7kΩ ±5%	1
R816	RME0876	R,Metal,Chip 1/8W 1.0kΩ ±5%	1
R817	RME0883	R,Metal,Chip 1/8W 3.9kΩ ±5%	1
R818	RME0876	R,Metal,Chip 1/8W 1.0kΩ ±5%	1
R821	RME1074	R,Metal 1/4W 1.50kΩ ±1%	1
R822	RME1074	R,Metal 1/4W 1.50kΩ ±1%	1
R823	RCE0779	R,Carbon 1/4W 6.8kΩ ±5%	1
R824	RCE0779	R,Carbon 1/4W 6.8kΩ ±5%	1
R825	RCE0772	R,Carbon 1/4W 1.8kΩ ±5%	1
R826	RME0872	R,Metal,Chip 1/8W 470Ω ±5%	1
R831	RME0876	R,Metal,Chip 1/8W 1.0kΩ ±5%	1
R832	RME0876	R,Metal,Chip 1/8W 1.0kΩ ±5%	1
R834	RME0883	R,Metal,Chip 1/8W 3.9kΩ ±5%	1
R836	RME0896	R,Metal,Chip 1/8W 47kΩ ±5%	1
R838	RME0864	R,Metal,Chip 1/8W 100Ω ±5%	1
R839	RME0864	R,Metal,Chip 1/8W 100Ω ±5%	1
R841	RME1071	R,Metal 1/4W 825Ω ±1%	1
R842	RME1071	R,Metal 1/4W 825Ω ±1%	1
R843	RME0860	R,Metal,Chip 1/8W 47Ω ±5%	1
R844	RME0864	R,Metal,Chip 1/8W 100Ω ±5%	1
R846	RME0896	R,Metal,Chip 1/8W 47kΩ ±5%	1
R847	RME0868	R,Metal,Chip 1/8W 220Ω ±5%	1
R852	RME1078	R,Metal 1/4W 3.32kΩ ±1%	1

SYMBOL	PART CODE	DESCRIPTION	Q'TY
R853	RME1078	R,Metal 1/4W 3.32kΩ ±1%	1
R861	RME0873	R,Metal,Chip 1/8W 560Ω ±5%	1
R862	RME1081	R,Metal 1/4W 5.62kΩ ±1%	1
R863	RME0880	R,Metal,Chip 1/8W 2.2kΩ ±5%	1
R864	RME0892	R,Metal,Chip 1/8W 22kΩ ±5%	1
R865	RME0880	R,Metal,Chip 1/8W 2.2kΩ ±5%	1
R866	RME0892	R,Metal,Chip 1/8W 22kΩ ±5%	1
R867	RME0876	R,Metal,Chip 1/8W 1.0kΩ ±5%	1
R868	RME0879	R,Metal,Chip 1/8W 1.8kΩ ±5%	1
R871	RME0864	R,Metal,Chip 1/8W 100Ω ±5%	1
R875	RME0884	R,Metal,Chip 1/8W 4.7kΩ ±5%	1
R876	RME0885	R,Metal,Chip 1/8W 5.6kΩ ±5%	1
R877	RME0876	R,Metal,Chip 1/8W 1.0kΩ ±5%	1
R881	RME1070	R,Metal 1/4W 681Ω ±1%	1
R882	RME1070	R,Metal 1/4W 681Ω ±1%	1
R884	RME0881	R,Metal,Chip 1/8W 2.7kΩ ±5%	1
R885	RME0892	R,Metal,Chip 1/8W 22kΩ ±5%	1
R886	RME0864	R,Metal,Chip 1/8W 100Ω ±5%	1
R887	RME0864	R,Metal,Chip 1/8W 100Ω ±5%	1
R1101	RME0875	R,Metal,Chip 1/8W 820Ω ±5%	1
R1102	RME0896	R,Metal,Chip 1/8W 47kΩ ±5%	1
R1103	RME0892	R,Metal,Chip 1/8W 22kΩ ±5%	1
R1104	RME0884	R,Metal,Chip 1/8W 4.7kΩ ±5%	1
R1105	RME0872	R,Metal,Chip 1/8W 470Ω ±5%	1
R1106	RME0890	R,Metal,Chip 1/8W 15kΩ ±5%	1
R1109	RME0879	R,Metal,Chip 1/8W 1.8kΩ ±5%	1
R1112	RME0892	R,Metal,Chip 1/8W 22kΩ ±5%	1
R1113	RME0892	R,Metal,Chip 1/8W 22kΩ ±5%	1
R1114	RME0883	R,Metal,Chip 1/8W 3.9kΩ ±5%	1
R1115	RME0886	R,Metal,Chip 1/8W 6.8kΩ ±5%	1
R1116	RME0890	R,Metal,Chip 1/8W 15kΩ ±5%	1
R1121	RME0912	R,Metal,Chip 0Ω	1
R1122	RME0912	R,Metal,Chip 0Ω	1
R1123	RME0878	R,Metal,Chip 1/8W 1.5kΩ ±5%	1
R1124	RME0885	R,Metal,Chip 1/8W 5.6kΩ ±5%	1
R1125	RME0872	R,Metal,Chip 1/8W 470Ω ±5%	1
R1126	RME0868	R,Metal,Chip 1/8W 220Ω ±5%	1
R1127	RME0872	R,Metal,Chip 1/8W 470Ω ±5%	1
R2100	RCE0738	R,Carbon 1/2W 2.2MΩ ±5%	1
R2105	RME0900	R,Metal,Chip 1/8W 100kΩ ±5%	1
R2106	RME0888	R,Metal,Chip 1/8W 10kΩ ±5%	1
R2107	RME0888	R,Metal,Chip 1/8W 10kΩ ±5%	1
R2108	RME0896	R,Metal,Chip 1/8W 47kΩ ±5%	1
R2109	RME0896	R,Metal,Chip 1/8W 47kΩ ±5%	1
R2111	RME1125	R,Metal 1/4W 5.11kΩ ±1%	1
R2112	RME1082	R,Metal 1/4W 6.81kΩ ±1%	1
R2115	RME0888	R,Metal,Chip 1/8W 10kΩ ±5%	1
R2116	RME0888	R,Metal,Chip 1/8W 10kΩ ±5%	1
R2117	RME0864	R,Metal,Chip 1/8W 100Ω ±5%	1
R2118	RME0864	R,Metal,Chip 1/8W 100Ω ±5%	1
R2119	RME0902	R,Metal,Chip 1/8W 220kΩ ±5%	1
R2120	RME0902	R,Metal,Chip 1/8W 220kΩ ±5%	1
R2130	RME0864	R,Metal,Chip 1/8W 100Ω ±5%	1
R2131	RME0876	R,Metal,Chip 1/8W 1.0kΩ ±5%	1
R2132	RME0874	R,Metal,Chip 1/8W 680Ω ±5%	1
R2142	RME0876	R,Metal,Chip 1/8W 1.0kΩ ±5%	1
R2146	RME0868	R,Metal,Chip 1/8W 220Ω ±5%	1
R2150	RME0852	R,Metal,Chip 1/8W 10Ω ±5%	1
R2151	RME0852	R,Metal,Chip 1/8W 10Ω ±5%	1
R2155	RME0888	R,Metal,Chip 1/8W 10kΩ ±5%	1
R2156	RME0860	R,Metal,Chip 1/8W 47Ω ±5%	1
R2157	RME0912	R,Metal,Chip 0Ω	1
R2161	RME0882	R,Metal,Chip 1/8W 3.3kΩ ±5%	1

SYMBOL	PART CODE	DESCRIPTION	Q'TY
R2163	RME0872	R,Metal,Chip 1/8W 470Ω ±5%	1
R2164	RME0872	R,Metal,Chip 1/8W 470Ω ±5%	1
R2165	RME0882	R,Metal,Chip 1/8W 3.3kΩ ±5%	1
R2166	RME0882	R,Metal,Chip 1/8W 3.3kΩ ±5%	1
R2167	RME0876	R,Metal,Chip 1/8W 1.0kΩ ±5%	1
R2168	RME0892	R,Metal,Chip 1/8W 22kΩ ±5%	1
R2169	RME0872	R,Metal,Chip 1/8W 470Ω ±5%	1
R2171	RME0912	R,Metal,Chip 0Ω	1
R2173	RME0912	R,Metal,Chip 0Ω	1
R2176	RME0912	R,Metal,Chip 0Ω	1
R2177	RME0872	R,Metal,Chip 1/8W 470Ω ±5%	1
R2178	RME0872	R,Metal,Chip 1/8W 470Ω ±5%	1
R2201	RME0872	R,Metal,Chip 1/8W 470Ω ±5%	1
R2202	RME0912	R,Metal,Chip 0Ω	1
R2203	RME0858	R,Metal,Chip 1/8W 33Ω ±5%	1
R2204	RME1084	R,Metal 1/4W 10.0kΩ ±1%	1
R2205	RME1084	R,Metal 1/4W 10.0kΩ ±1%	1
R2210	RME1229	R,Metal,Chip 1/8W 820kΩ ±5%	1
R2211A	RME1207	R,Metal 1/4W 75.0kΩ ±1%	1
R2212	RME0879	R,Metal,Chip 1/8W 1.8kΩ ±5%	1
R2213	RME0892	R,Metal,Chip 1/8W 22kΩ ±5%	1
R2220	RME0864	R,Metal,Chip 1/8W 100Ω ±5%	1
R2221	RME0876	R,Metal,Chip 1/8W 1.0kΩ ±5%	1
R2222	kME0874	R,Metal,Chip 1/8W 680Ω ±5%	1
R2225	RME1069	R,Metal 1/4W 562Ω ±1%	1
R2225A	RME1121	R,Metal 1/4W 1.37kΩ ±1%	1
R2226	RME1123	R,Metal 1/4W 2.43kΩ ±1%	1
R2226A	RME1371	R,Metal 1/4W 1.65kΩ ±1%	1
R2229	RME1088	R,Metal 1/4W 22.1kΩ ±1%	1
R2230	RME0852	R,Metal,Chip 1/8W 10Ω ±5%	1
R2231	RME0852	R,Metal,Chip 1/8W 10Ω ±5%	1
R2232	RME0866	R,Metal,Chip 1/8W 150Ω ±5%	1
R2235A	RCE0766	R,Carbon 1/4W 560Ω ±5%	1
R2236A	RCE0773	R,Carbon 1/4W 2.2kΩ ±5%	1
R2243	RME0880	R,Metal,Chip 1/8W 2.2kΩ ±5%	1
R2244	RME0864	R,Metal,Chip 1/8W 100Ω ±5%	1
R2245	RME0888	R,Metal,Chip 1/8W 10kΩ ±5%	1
R2246	RME1155	R,Metal 1/4W 4.00kΩ ±0.5%	1
R2247	RME1711	R,Metal 1/4W 1.00kΩ ±0.5%	1
R2249	RCE0757	R,Carbon 1/4W 100Ω ±5%	1
R5150	RME0864	R,Metal 1/8W 100Ω ±5%	1
R5151	RME0860	R,Metal 1/8W 47Ω ±5%	1
R5152	RME0877	R,Metal 1/8W 1.2kΩ ±5%	1
R5153	RME0864	R,Metal 1/8W 100Ω ±5%	1
R5154	RME0864	R,Metal 1/8W 100Ω ±5%	1
R5155	RME0864	R,Metal 1/8W 100Ω ±5%	1
RM2120	RZA0166	R,Block EXB-LD10-503G	1
RM2211	RCE0852	R,Block EXB-LD8-503G	1
RM2231	RCE0852	R,Block EXB-LD8-503G	1
RM2232	RCE0854	R,Block EXB-LD4-503G	1
RT847	HDD0086	Thermistor 32D27	1
RV675	RNE0047	VR,Metal EVN 39C00YB54(50k)	1
RV685	RNE0047	VR,Metal EVN 39C00YB54(50k)	1
RV801	RNE0058	VR,Metal EVN 39C00YB13(1k)	1
RV807	RNE0051	VR,Metal EVN 39C00YB14(10k)	1
RV831	RNE0048	VR,Metal EVN 39C00YB22(200)	1
RV834	RNE0070	VR,Metal EVN 39C00YB53(5k)	1
RV844	RNE0049	VR,Metal EVN 39C00YB12(100)	1
RV876	RNE0051	VR,Metal EVN 39C00YB14(10k)	1
RV884	RNE0070	VR,Metal EVN 39C00YB53(5k)	1

PEF-783 PANEL

PART CODE	DESCRIPTION	Q'TY
SSR0312	SW,Rotary SRBM 1024(N)	1
HTA0263	Transistor,Chip 2SA1052MD	1
HTC0686	Transistor,Chip 2SC2462LC	1
HTC0686	Transistor,Chip 2SC2462LC	1
HTA0318	Transistor,Chip 2SA1462Y34	1
HTA0318	Transistor,Chip 2SA1462Y34	1
HTA0318	Transistor,Chip 2SA1462Y34	1
HTA0318	Transistor,Chip 2SA1462Y34	1
HTC0590	Transistor,Chip 2SC1621B4	1
HTA0263	Transistor,Chip 2SA1621B4	1
HTA0263	Transistor,Chip 2SA1052MD	1
HTC0686	Transistor,Chip 2SC2462LC	1
HTK0147	Transistor,Chip 2SK436A20	1
HTC0872	Transistor,Chip 2SC2620QC	1
HTC0338	Transistor 2SC1906	1
HTC0686	Transistor,Chip 2SC2462LC	1
HTC0813	Transistor 2SC2853E	1
HTA0336	Transistor 2SA1188E	1
HTD0202	Transistor,Chip 2SD596DV3	1
HTD0202	Transistor,Chip 2SD596DV3	1
HTD0202	Transistor,Chip 2SD596DV3	1
HTA0263	Transistor,Chip 2SA1052MD	1
HTA0263	Transistor,Chip 2SA1052MD	1
HTA0263	Transistor,Chip 2SA1052MD	1
HTC0686	Transistor,Chip 2SC2462LC	1
HTA0334	Transistor,Chip 2SA1226E4	1
HTC0691	Transistor,Chip 2SC2735JC	1
HTC0691	Transistor,Chip 2SC2735JC	1
HTA0334	Transistor,Chip 2SA1226E4	1
HTA0334	Transistor,Chip 2SA1226E4	1
HTA0263	Transistor,Chip 2SA1052MD	1
HTA0263	Transistor,Chip 2SA1052MD	1
HTA0263	Transistor,Chip 2SA1052MD	1
HTA0263	Transistor,Chip 2SA1052MD	1
HTA0263	Transistor,Chip 2SA1052MD	1
HTC0781	Transistor 2SC3068	1
HTC0691	Transistor 2SC2735JC	1

SYMBOL	PART CODE	DESCRIPTION	Q'TY
C1601	CCG0211	C,Ceramic,Chip 50V 10000pF ±10%	1
C1602	CCG0211	C,Ceramic,Chip 50V 10000pF ±10%	1
C1604	CCG0211	C,Ceramic,Chip 50V 10000pF ±10%	1
C1605	CCG0211	C,Ceramic,Chip 50V 10000pF ±10%	1
D1601	HDP0033	Diode PG5534SY	1
D1602	8392133-4	Diode GL-9PR2	1
D1605	8392133-4	Diode GL-9PR2	1
D1606	8392133-4	Diode GL-9PR2	1
D1607	8392133-4	Diode GL-9PR2	1
D1608	8392133-4	Diode GL-9PR2	1
D1609	8392133-4	Diode GL-9PR2	1
D1610	8392133-4	Diode GL-9PR2	1
D1611	8392133-4	Diode GL-9PR2	1
IC1601	IDH0651	IC,Digital HD74LS164P	1
IC1602	IDH0651	IC,Digital HD74LS164P	1
R1601	RME0873	R,Metal,Chip 1/8W 560Ω ±5%	1
R1602	RME0873	R,Metal,Chip 1/8W 560Ω ±5%	1
R1605	RME0873	R,Metal,Chip 1/8W 560Ω ±5%	1
R1606	RME0873	R,Metal,Chip 1/8W 560Ω ±5%	1
R1607	RME0873	R,Metal,Chip 1/8W 560Ω ±5%	1
R1608	RME0873	R,Metal,Chip 1/8W 560Ω ±5%	1
R1609	RME0873	R,Metal,Chip 1/8W 560Ω ±5%	1
R1610	RME0873	R,Metal,Chip 1/8W 560Ω ±5%	1
R1611	RME0873	R,Metal,Chip 1/8W 560Ω ±5%	1
R1612	RME0864	R,Metal,Chip 1/8W 100Ω ±5%	1
R1620	RME0884	R,Metal,Chip 1/8W 4.7kΩ ±5%	1
R1621	RME0880	R,Metal,Chip 1/8W 2.2kΩ ±5%	1
R1622	RME0868	R,Metal,Chip 1/8W 220Ω ±5%	1
R1623	RME0898	R,Metal,Chip 1/8W 68kΩ ±5%	1
R1631	RME0864	R,Metal,Chip 1/8W 100Ω +5%	1
R1632	RME1060	R,Metal 1/4W 100Ω ±1%	1
R1633	RME1060	R,Metal 1/4W 100Ω ±1%	1
R1634	RME1109	R,Metal 1/4W 200Ω ±1%	1
R1635	RME1154	R,Metal 1/4W 600Ω ±0.5%	1
RM1601	RZA0202	R,Block EXB-LE5-502S	1
RM1602	RZA0202	R,Block EXB-LE5-502S	1
RM1603	RZA0202	R,Block EXB-LE5-502S	1
RV1601	RDV0546	VR,Carbon V12L5(PVB)N10kΩSHAFT18	1
RV1602	RNR0209	VR,Metal 1/2W 10kΩ ±25%	1
RV1603	RDV0545	VR,Carbon V12L5(PVB)N 1kΩSHAFT18	1
RV1604	RDV0546	VR,Carbon V12L5(PVB)N10kΩSHAFT18	1
RV1605	RDV0546	VR,Carbon V12L5(PVB)N10kΩSHAFT18	1
RV1606	RNR0210	VR,Metal 1/2W 4.7Ω ±25%	1
RV1607	RDV0546	VR,Carbon V12L5(PVB)N10kΩSHAFT18	1
RV2400	RNR0211	VR,Metal RK163 1210AG5B(10k)	1
S1601	SSP0572	SW,Push SPPH2 TYPE-A NONLOCK	1
S1602	SSP0572	SW,Push SPPH2 TYPE-A NONLOCK	1
S1603	SSL0076	SW,Lever AL2S-2M(WITH NOBAZ4004)	1
S1605	SSP0570	SW,Push SPPH1 TYPE-A SELFLOCK	1
S1606	SSP0573	SW,Push SPUV30(STROKE1.5MM,RESET)	1
S1607	SSP0571	SW,Push SPPH1 TYPE-A NONLOCK	1
S1608	SSP0573	SW,Push SPUV30(STROKE1.5MM,RESET)	1
S1609	SSP0571	SW,Push SPPH1 TYPE-A NONLOCK	1
S1610	SSP0570	SW,Push SPPH1 TYPE-A SELFLOCK	1
S1611	SSP0570	SW,Push SPPH1 TYPE-A SELFLOCK	1
S1612	SSP0570	SW,Push SPPH1 TYPE-A SELFLOCK	1
S1612	SSP0570	SW,Push SPPH1 TYPE-A SELFLOCK	1

SYMBOL	PART CODE	DESCRIPTION	Q'TY

PEF-784 POWER

SYMBOL	PART CODE	DESCRIPTION	Q'TY
	8480992	Sheet 35X 65 UL94V-1	1
	8480993	Sheet 25X 25 UL94V-1	1
	8488452	Sheet 25X 36 UL94V-1	1
C850	CCC1030	C,Ceramic 50V 10000pF +80% -20%	1
C855	CCC1002	C,Ceramic 50V 10pF ±5pF	1
C856	CCC1002	C,Ceramic 50V 10pF ±5pF	1
C857	CCD0273	C,Ceramic 500V 2pF ±0.25pF	1
C858	CCD0273	C,Ceramic 500V 2pF ±0.25pF	1
C862	CCC1030	C,Ceramic 50V 10000pF +80% -20%	
C863	CCC1030	C,Ceramic 50V 10000pF +80% -20%	1
C871	CQA0037	C,Plastic 250V 0.01μF ±10%	1
C872	CQA0037	C,Plastic 250V 0.01μF ±10%	1
C883	CQA0037	C,Plastic 250V 0.01μF ±10%	1
C884	CQA0037	C,Plastic 250V 0.01μF ±10%	1
C885	CCC1026	C,Ceramic 50V 150pF ±10%	1
C886	CCC1026	C,Ceramic 50V 150pF ±10%	1
C901	CES0032	C,AL Elyc 25V 47μF ±20%	1
C904	CCD0272	C,Ceramic 500V 1pF ±0.25pF	1
C908	CCD0287	C,Ceramic 500V 4700pF +100% -0%	1
C911	CCC1030	C,Ceramic 50V 10000pF +80% -20%	1
C912	CEK0162	C,AL Elyc 160V 1μF ±20%	1
C1004	CQA0139	C,Plastic 50V 0.068μF ±5%	1
C1005	CEC0175	C,AL Elyc 25V 10μF ±20%	1
C1010	CQA0099	C,Plastic 50V 22000pF ±10%	1
C1011	CES0032	C,AL Elyc 25V 47μF ±20%	1
C1013	CQE0121	C,Plastic 600V 0.01μF ±5%	1
C1020	CEK0209	C,AL Elyc 100V 22μF ±20%	1
C1021	CEK0209	C,AL Elyc 100V 22μF ±20%	1
C1022	CES0134	C,AL Elyc 50V 1μF ±20%	1
C1023	CQA0101	C,Plastic 50V 47000pF ±10%	1
C1024	CES0032	C,AL Elyc 25V 47μF ±20%	1
C1031	CCD0375	C,Ceramic 2000V 10000pF +80% -20%	1
C1032	CCD0231	C,Ceramic 2000V 4700pF +80% -20%	1
C1033	CCD0231	C,Ceramic 2000V 4700pF +80% -20%	1

SYMBOL	PART CODE	DESCRIPTION	Q'TY
C1034	CCD0231	C,Ceramic 2000V 4700pF +80% -20%	1
C1035	CCD0246	C,Ceramic 2kV 1000pF ±10%	1
C1040	CCD0286	C,Ceramic 500V 1000pF +100% -0%	1
C1041	CCD0231	C,Ceramic 2000V 4700pF +80% -20%	1
C1042	CET0033	C,AL Elyc 160V 1μF ±20%	1
C1043	CCD0231	C,Ceramic 2000V 4700pF +80% -20%	1
C1254	CCD0231	C,Ceramic 2000V 4700pF +80% -20%	1
C1255	CCD0286	C,Ceramic 500V 1000pF +100% -0%	1
C1256	CCD0231	C,Ceramic 2000V 4700pF +80% -20%	1
C1257	CCD0231	C,Ceramic 2000V 4700pF +80% -20%	1
C1258	CQA0037	C,Plastic 250V 0.01μF ±10%	1
C1259	CQA0037	C,Plastic 250V 0.01μF ±10%	1
C1280	CCC1030	C,Ceramic 50V 10000pF +80% -20%	1
C1281	CCD0287	C,Ceramic 500V 4700pF +100% -0%	1
C1282	CCD0287	C,Ceramic 500V 4700pF +100% -0%	1
C1504	CCD0338	C,Ceramic 400V 2200pF ±20%	1
C1505	CCD0338	C,Ceramic 400V 2200pF ±20%	1
C1506	CEK0177	C,AL Elyc 400V 100μF ±20%	1
C1507	CEK0208	C,AL Elyc 50V 22μF ±20%	1
C1508	CEK0186	C,AL Elyc 50V 4.7μF ±20%	1
C1509	CEK0179	C,AL Elyc 400V 56μF ±20%	1
C1511	CCD0341	C,Ceramic 1kV 1000pF ±10%	1
C1512	CEK0184	C,AL Elyc 25V 47μF ±20%	1
C1513	CCD0341	C,Ceramic 1kV 1000pF ±10%	1
C1514	CCC1030	C,Ceramic 50V 0.01μF ±10%	1
C1522	CCD0246	C,Ceramic 2kV 1000pF ±10%	1
C1531	CEK0180	C,AL Elyc 160V 4.7μF ±20%	1
C1532	CES0376	C,AL Elyc 160V 4.7μF ±20%	1
C1533	CES0376	C,AL Elyc 160V 4.7μF ±20%	1
C1541	CEK0181	C,AL Elyc 63V 47μF ±20%	1
C1542	CES0377	C,AL Elyc 63V 47μF ±20%	1
C1551	CEK0182	C,AL Elyc 16V 330μF ±20%	1
C1552	CES0378	C,AL Elyc 16V 330μF ±20%	1
C1553	CES0378	C,AL Elyc 16V 330μF ±20%	1
C1554	CEK0182	C,AL Elyc 16V 330μF ±20%	1
C1561	CEK0183	C,AL Elyc 10V 470μF ±20%	1
C1562	CES0379	C,AL Elyc 10V 470μF ±20%	1
C1563	CES0379	C,AL Elyc 10V 470μF ±20%	1
C1571	CEK0182	C,AL Elyc 16V 330μF ±20%	1
C1572	CES0378	C,AL Elyc 16V 330μF ±20%	1
C1573	CES0318	C,AL Elyc 16V 1000μF ±20%	1
C1574	CES0378	C,AL Elyc 16V 330μF ±20%	1
C1593	CES0038	C,AL Elyc 50V 2.2μF ±20%	1
C1594	CQA0124	C,Plastic 50V 0.1μF ±10%	1
CV859	CVT0054	C,Variable TZ03Z050NR169 (5P)	1
D862	HDM0139	Diode MTZ 3.3JA	1
D863	HDM0139	Diode MTZ 3.3JA	1
D871	HDS0437	Diode 1SS133	1
D872	HDS0437	Diode 1SS133	1
D873	HDM0051	Diode MA161	1
D874	HDM0051	Diode MA161	1

PART CODE	DESCRIPTION	Q'TY
HDS0437	Diode 1SS133	1
HDS0437	Diode 1SS133	1
HDX0055	Diode 1SS165	1
HDS0437	Diode 1SS133	1
HDS0437	Diode 1SS133	1
HDM0139	Diode MTZ 3.3JA	1
HDR0215	Diode RU3AMLF-B1	1
HDS0437	Diode 1SS133	1
HDH0175	Diode HZ7A3	1
HDS0437	Diode 1SS133	1
HDH0019	Diode HZ12B	1
HDS0437	Diode 1SS133	1
HDS0437	Diode 1SS133	1
HDS0437	Diode 1SS133	1
HDS0437	Diode 1SS133	1
HDS0250	Diode 1SS83	1
HDS0250	Diode 1SS83	1
HDS0250	Diode 1SS83	1
HDS0250	Diode 1SS83	1
HDM0141	Diode MTZ 7.5JC	1
HDM0141	Diode MTZ 7.5JC	1
HDS0250	Diode 1SS83	1
HDS0250	Diode 1SS83	1
HDS0250	Diode 1SS83	1
HDS0250	Diode 1SS83	1
HDR0234	Diode RBV-406	1
HDG0082	Diode GZB 3.0B	1
HDA0071	Diode AU01	1
HDA0071	Diode AU01	1
HDG0081	Diode GZB 2.4B	1
HDG0083	Diode GZB 6.8B	1
HDD0141	Diode DTA10E	1
HDA0071	Diode AU01	1
HDA0074	Diode AU01A	1
HDA0071	Diode AU01	1
HDF0051	Diode FML-12S	1
HDF0052	Diode FMB-24	1
HDF0051	Diode FML-12S	1
HDS0437	Diode 1SS133	1
EFZ0013	IC,Protect ICP-F10 (0.4A)	1
IZS0109	IC,Hybrid STK7308	1
HZP0013	Photocopul PC714U	1
ETZ0121	Faston 62747-1	1
ETZ0121	Faston 62747-1	
TLE0173	Coil ELO607SKI 101K (100μH)	1
TLE0172	Coil ELO607SKI 470K (47μH)	1
TLL0174	Coil LC0243 (24μH)	1
TLX0175	Coil BLO2RN1-R62	1
TLX0175	Coil BLO2RN1-R62	1
TLT0085	Coil 47μH ±10% 0.94A	1
TLT0085	Coil 47μH ±10% 0.94A	1
TLT0086	Coil 22μH ±10% 1.3 A	1
TLT0086	Coil 22μH ±10% 1.3 A	1
TLT0086	Coil 22μH ±10% 1.3 A	1
JBB0060	Connector B5B-XH-A	1
JBB0022	Connector B6B-XH-A	1
JBB0022	Connector B6B-XH-A	1
JBB0021	Connector B3B-XH-A	1

SYMBOL	PART CODE	DESCRIPTION	Q'TY
P1290	JBB0021	Connector B3B-XH-A	1
P1501	JBB0024	Connector B15B-XH-A	1
P1502	JBB0023	Connector B8B-XH-A	1
R850	RCE0903	R,Carbon 1/4W 1.5MΩ ±5%	1
R851	RCE0756	R,Carbon 1/4W 82Ω ±5%	1
R852	RCE0756	R,Carbon 1/4W 82Ω ±5%	1
R855	RCE0775	R,Carbon 1/4W 3.3kΩ ±5%	1
R856	RCE0775	R,Carbon 1/4W 3.3kΩ ±5%	1
R857	RME1383	R,Metal 1W 22kΩ ±5%	1
R858	RME1383	R,Metal 1W 22kΩ ±5%	1
R859	RCE0761	R,Carbon 1/4W 220Ω ±5%	1
R860	RCE0769	R,Carbon 1/4W 1kΩ ±5%	1
R861	RCE0769	R,Carbon 1/4W 1kΩ ±5%	1
R862	RCE0755	R,Carbon 1/4W 68Ω ±5%	1
R863	RCE0755	R,Carbon 1/4W 68Ω ±5%	1
R865	RCE0796	R,Carbon 1/4W 180kΩ ±5%	1
R866	RCE0796	R,Carbon 1/4W 180kΩ ±5%	1
R867	RCE0778	R,Carbon 1/4W 5.6kΩ ±5%	1
R868	RCE0778	R,Carbon 1/4W 5.6kΩ ±5%	1
R869	RZZ0032	R,Fusing 1/4W 470Ω ±5%	1
R870	RZZ0032	R,Fusing 1/4W 470Ω ±5%	1
R871	RME1079	R,Metal 1/4W 3.92kΩ ±1%	1
R872	RME1079	R,Metal 1/4W 3.92kΩ ±1%	1
R873	RME1072	R,Metal 1/4W 1.0kΩ ±1%	1
R881	RCE0753	R,Carbon 1/4W 47Ω ±5%	1
R882	RCE0753	R,Carbon 1/4W 47Ω ±5%	1
R883	RCE0771	R,Carbon 1/4W 1.5kΩ ±5%	1
R884	RCE0771	R,Carbon 1/4W 1.5kΩ ±5%	1
R891	RCE0763	R,Carbon 1/4W 330Ω ±5%	1
R892	RCE0763	R,Carbon 1/4W 330Ω ±5%	1
R893	RCE0757	R,Carbon 1/4W 100Ω ±5%	1
R894	RCE0757	R,Carbon 1/4W 100Ω ±5%	1
R895	RME1077	R,Metal 1/4W 2.67kΩ ±1%	1
R896	RME1077	R,Metal 1/4W 2.67kΩ ±1%	1
R897	RCE0761	R,Carbon 1/4W 220Ω ±5%	1
R898	RME1082	R,Metal 1/4W 6.81kΩ ±1%	1
R901	RME1080	R,Metal 1/4W 4.75kΩ ±1%	1
R902	RCE0781	R,Carbon 1/4W 10kΩ ±5%	1
R904	RCE0721	R,Carbon 1/2W 22kΩ ±5%	1
R905	RME1087	R,Metal 1/4W 18.2kΩ ±1%	1
R907	RCE0753	R,Carbon 1/4W 47Ω ±5%	1
R908	RCE0768	R,Carbon 1/4W 820Ω ±5%	1
R909	RCE0790	R,Carbon 1/4W 56kΩ ±5%	1
R910	RCE0788	R,Carbon 1/4W 39kΩ ±5%	1
R911	RME1541	R,Metal 2W 6.8kΩ ±5%	1
R915	RZZ0031	R,Fusing 1/4W 220Ω ±5%	1
R1001	RCE0782	R,Carbon 1/4W 12kΩ ±5%	1
R1002	RCE0775	R,Carbon 1/4W 3.3kΩ ±5%	1
R1003	RCE0772	R,Carbon 1/4W 1.8kΩ ±5%	1
R1004	RCE0775	R,Carbon 1/4W 3.3kΩ ±5%	1
R1005	RCE0785	R,Carbon 1/4W 22kΩ ±5%	1
R1006	RCE0769	R,Carbon 1/4W 1.0kΩ ±5%	1
R1007	RCE0769	R,Carbon 1/4W 1.0kΩ ±5%	1
R1010	RCE0757	R,Carbon 1/4W 100Ω ±5%	1
R1011	RCE0693	R,Carbon 1/2W 100Ω ±5%	1
R1012	RCE0693	R,Carbon 1/2W 100Ω ±5%	1
R1019	RCE0755	R,Carbon 1/4W 68Ω ±5%	1
R1020	RCE0779	R,Carbon 1/4W 6.8kΩ ±5%	1
R1021	RCE0780	R,Carbon 1/4W 8.2kΩ ±5%	1
R1022	RCE0787	R,Carbon 1/4W 33kΩ ±5%	1
R1023	RME1261	R,Metal 1/4W 43.2kΩ ±1%	1
R1024	RME1726	R,Metal 1/4W 24.3kΩ ±1%	1

SYMBOL	PART CODE	DESCRIPTION	Q'TY
R1025	RCE0779	R,Carbon 1/4W 6.8kΩ ±5%	1
R1026	RCE0775	R,Carbon 1/4W 3.3kΩ ±5%	1
R1027	RCE0763	R,Carbon 1/4W 330Ω ±5%	1
R1028	RME1759	R,Metal 2W 3.3kΩ ±5%	1
R1029	RCE0785	R,Carbon 1/4W 22kΩ ±5%	1
R1032	RCE0715	R,Carbon 1/2W 6.8kΩ ±5%	1
R1035	RMV0012	R,Metal 1/2W 15MΩ ±1%	1
R1040	RCE0798	R,Carbon 1/4W 330kΩ ±5%	1
R1041	RCE0769	R,Carbon 1/4W 1kΩ ±5%	1
R1042	RCE0790	R,Carbon 1/4W 56kΩ ±5%	1
R1043	RSE0434	R,Solid 1/4W 10MΩ ±5%	1
R1251	RCE0795	R,Carbon 1/4W 150kΩ ±5%	1
R1252	RMV0012	R,Metal 1/2W 15MΩ ±1%	1
R1253	RSE0434	R,Solid 1/4W 10MΩ ±5%	1
R1254	RMV0014	R,Metal 1/2W 6.20MΩ ±1%	1
R1255	RCE0735	R,Carbon 1/2W 1MΩ ±5%	1
R1256	RCE0792	R,Carbon 1/4W 82kΩ ±5%	1
R1257	RCE0794	R,Carbon 1/4W 120kΩ ±5%	1
R1258	RCE0781	R,Carbon 1/4W 10kΩ ±5%	1
R1259	RCE0717	R,Carbon 1/2W 10kΩ ±5%	1
R1260	RCE0725	R,Carbon 1/2W 47kΩ ±5%	1
R1271	RCE0781	R,Carbon 1/4W 10kΩ ±5%	1
R1272	RCE0794	R,Carbon 1/4W 120kΩ ±5%	1
R1280	RCE0786	R,Carbon 1/4W 27kΩ ±5%	1
R1281	RCE0781	R,Carbon 1/4W 10kΩ ±5%	1
R1282	RCE0785	R,Carbon 1/4W 22kΩ ±5%	1
R1283	RCE0757	R,Carbon 1/4W 100Ω ±5%	1
R1284	RCE0757	R,Carbon 1/4W 100Ω ±5%	1
R1501	RWK0003	R,Wire 3W 10Ω ±5%	1
R1502	RWK0007	R,Wire 3W 3.3Ω ±5%	1
R1503	RCE0729	R,Carbon 1/2W 100kΩ ±5%	1
R1504	RCE0729	R,Carbon 1/2W 100kΩ ±5%	1
R1505	RCE0769	R,Carbon 1/4W 1kΩ ±5%	1
R1506	RCE0784	R,Carbon 1/4W 18kΩ ±5%	1
R1507	RCE0778	R,Carbon 1/4W 5.6kΩ ±5%	1
R1508	RCE0779	R,Carbon 1/4W 6.8kΩ ±5%	1
R1509	RCE0782	R,Carbon 1/4W 12kΩ ±5%	1
R1512	RMR2791	R,Metal 2W 47Ω ±5%	1
R1515	RCE0773	R,Carbon 1/4W 2.2kΩ ±5%	1
R1521	RCE0685	R,Carbon 1/2W 22Ω ±5%	1
R1522	RMR2789	R,Metal 2W 22Ω ±5%	1
R1591	RCE0729	R,Carbon 1/2W 100kΩ ±5%	1
R1592	RCE0729	R,Carbon 1/2W 100kΩ ±5%	1
R1593	RCE0789	R,Carbon 1/4W 47kΩ ±5%	1
RV1042	RNE0088	VR,Metal EVM-K3GA00B54(50k)	1
RV1253	RNE0089	VR,Metal EVM-K3GA00B15(100k)	1
RV1281	RNE0089	VR,Metal EVM-K3GA00B15(100k)	1
RV1506	RNE0087	VR,Metal EVM-K3GA00B53(5k)	1
S1501	SSP0581	SW,Push SDDS (with WIRE TERMINAL)	1
T1010	TTH0006	Transform H-DRIVE HD-12	1
T1013	8474287-B	XFMR 15kV(+B=50VDC) FOR V-1060	1
T1501	8482913	XFMR HTH1KA025	1
TR851	HTC0168	Transistor 2SC535C	1
TR852	HTC0168	Transistor 2SC535C	1
TR853	HTC0148	Transistor 2SC458C	1
TR854	HTC0148	Transistor 2SC458C	1
TR871	HTA0258	Transistor 2SA1210S	1
TR872	HTA0258	Transistor 2SA1210S	1
TR881	HTC0338	Transistor 2SC1906	1

SYMBOL	PART CODE	DESCRIPTION	Q'TY
TR882	HTC0338	Transistor 2SC1906	1
TR885	HTC0669	Transistor 2SC2912S	1
TR886	HTC0669	Transistor 2SC2912S	1
TR901	HTC0192	Transistor 2SC641K-C	1
TR906	HTC0338	Transistor 2SC1906	1
TR910	HTA0258	Transistor 2SA1210S	1
TR912	HTC0669	Transistor 2SC2912S	1
TR1001	HTA0224	Transistor 2SA1029 D	1
TR1002	HTA0224	Transistor 2SA1029 D	1
TR1010	HTC0056	Transistor 2SC1213AC	1
TR1013	HTC0765	Transistor 2SC3090	1
TR1020	HTC0148	Transistor 2SC458C	1
TR1021	HTC0148	Transistor 2SC458C	1
TR1022	HTA0224	Transistor 2SA1029 D	1
TR1023	HTA0224	Transistor 2SA1029 D	1
TR1251	HTA0104	Transistor 2SA778A K	1
TR1514	HTC0148	Transistor 2SC458C	1

PEF-785 V OUT

SYMBOL	PART CODE	DESCRIPTION	Q'TY
	EHN0007	HEAT SINK NZ-5C	1
	EHN0007	HEAT SINK NZ-5C	1
C501	CES0133	C,AL Elyc 16V 47µF ±20%	1
C502	CES0133	C,AL Elyc 16V 47µF ±20%	1
C503	CES0133	C,AL Elyc 16V 47µF ±20%	1
C504	CET0033	C,AL Elyc 160V 1µF ±20%	1
C505	CCG0211	C,Ceramic,Chip 50V 10000pF ±10%	1
C509	CCG0205	C,Ceramic,Chip 50V 1000pF ±10%	1
C510	CCG0205	C,Ceramic,Chip 50V 1000pF ±10%	1
C516	CCG0213	C,Ceramic,Chip 50V 0.1F +80% -20%	1
C517	CCG0126	C,Ceramic,Chip 50V 12pF ±5%	1
C521	CCG0211	C,Ceramic,Chip 50V 10000pF ±10%	1
C525	CCG0116	C,Ceramic,Chip 50V 2pF ±0.25pF	1
C526	CCG0116	C,Ceramic,Chip 50V 2pF ±0.25pF	1
C531	CCG0211	C,Ceramic,Chip 50V 10000pF ±10%	1
C535	CCG0126	C,Ceramic,Chip 50V 12pF ±5%	1
C536	CCG0126	C,Ceramic,Chip 50V 12pF ±5%	1
C543	CCG0211	C,Ceramic,Chip 50V 10000pF ±10%	1
C544	CCG0211	C,Ceramic,Chip 50V 10000pF ±10%	1
C556	CCG0120	C,Ceramic,Chip 50V 6pF ±0.5pF	1
C557	CES0212	C,AL Elyc 10V 100µF ±20% BP	1
C558	CCG0209	C,Ceramic,Chip 50V 4700pF ±10%	1
C561	CCG0211	C,Ceramic,Chip 50V 10000pF ±10%	1
C565	CQA0037	C,Plastic 250V 0.01µF ±10%	1
C577	CCG0217	C,Ceramic,Chip 50V 0.047µF ±10%	1
C578	CCG0211	C,Ceramic,Chip 50V 10000pF ±10%	1
C580	CCG0141	C,Ceramic,Chip 50V 68pF ±5%	1
C582	CCG0179	C,Ceramic,Chip 50V 150pF ±5%	1
C592	CCG0197	C,Ceramic,Chip 50V 180pF ±5%	1
C594	CCG0144	C,Ceramic,Chip 50V 220pF ±5%	1
C1301	CES0133	C,AL Elyc 16V 47µF ±20%	1
C1302	CCG0203	C,Ceramic,Chip 50V 680pF ±5%	1
C1303	CCG0205	C,Ceramic,Chip 50V 1000pF ±10%	1
CV515	CVT0054	C,Variable TZ03Z050NR169 (5P)	1
CV517	CVT0056	C,Variable TZ03Z100NR169 (10P)	1
CV555	CVT0052	C,Variable TZB04N100BA (10P)	1

L	PART CODE	DESCRIPTION	Q'TY
	CVT0056	C,Variable TZ03Z100NR169 (10P)	1
	HDS0437	Diode 1SS133	1
	HDM0141	Diode MTZ 7.5JC	1
	HDS0437	Diode 1SS133	1
1	IDM0539	IC,Digital MN3102	1
	RME0912	R,Metal,Chip 0Ω	1
	8354946-B	Coil T-COIL(3T,7T)	1
	8354946-B	Coil T-COIL(3T,7T)	1
	TLE0076	Coil ELO606SKI 100μH ±10%	1
	JBS0070	Connector S5B-XH-A	1
	JBB0027	Connector B2B-XH-A	1
	JBB0023	Connector B8B-XH-A	1
	8355704-12	Cord L=60mm Red	1
	8355704-12	Cord L=60mm Red	1
	RCE0775	R,Carbon 1/4W 3.3kΩ ±5%	1
	RME1106	R,Metal 1/4W 75.0Ω ±1%	1
	RME1106	R,Metal 1/4W 75.0Ω ±1%	1
	RME0860	R,Metal,Chip 1/8W 47Ω ±5%	1
	RME1290	R,Metal 1/4W 1.1kΩ ±1%	1
	RME1290	R,Metal 1/4W 1.1kΩ ±1%	1
	RME0856	R,Metal,Chip 1/8W 22Ω ±5%	1
	RME0856	R,Metal,Chip 1/8W 22Ω ±5%	1
	RME0866	R,Metal,Chip 1/8W 150Ω ±5%	1
	RME0866	R,Metal,Chip 1/8W 150Ω ±5%	1
	RME0866	R,Metal,Chip 1/8W 150Ω ±5%	1
	RCE0761	R,Carbon 1/4W 220Ω ±5%	1
	RME0877	R,Metal,Chip 1/8W 1.2kΩ ±5%	1
	RME0891	R,Metal,Chip 1/8W 18kΩ ±5%	1
	RME0861	R,Metal,Chip 1/8W 56Ω ±5%	1
	RME1078	R,Metal 1/4W 3.32kΩ ±1%	1
	RME1078	R,Metal 1/4W 3.32kΩ ±1%	1
	RME1104	R,Metal 1/4W 51.1Ω ±1%	1
	RME1086	R,Metal 1/4W 15.0kΩ ±1%	1
	RME0858	R,Metal,Chip 1/8W 33Ω ±5%	1
	RME0858	R,Metal,Chip 1/8W 33Ω ±5%	1
	RME1064	R,Metal 1/4W 221Ω ±1%	1
	RME1064	R,Metal 1/4W 221Ω ±1%	1
	RCE0715	R,Carbon 1/2W 6.8kΩ ±5%	1
	RCE0715	R,Carbon 1/2W 6.8kΩ ±5%	1
	RME1066	R,Metal 1/4W 332Ω ±1%	1
	RME1066	R,Metal 1/4W 332Ω ±1%	1
	RME1067	R,Metal 1/4W 392Ω ±1%	1
	RME1067	R,Metal 1/4W 392Ω ±1%	1
	RME0858	R,Metal,Chip 1/8W 33Ω ±5%	1
	RME0858	R,Metal,Chip 1/8W 33Ω ±5%	1
	RME0862	R,Metal,Chip 1/8W 68Ω ±5%	1
	RME0862	R,Metal,Chip 1/8W 68Ω ±5%	1
	RME0858	R,Metal,Chip 1/8W 33Ω ±5%	1
	RME0858	R,Metal,Chip 1/8W 33Ω ±5%	1
	RME1058	R,Metal 1/4W 68.1Ω ±1%	1
	RME1058	R,Metal 1/4W 68.1Ω ±1%	1
	RME1058	R,Metal 1/4W 68.1Ω ±1%	1
	RME1058	R,Metal 1/4W 68.1Ω ±1%	1
	RME1048	R,Metal 1/4W 10.0Ω ±1%	1
	RME1048	R,Metal 1/4W 10.0Ω ±1%	1
	RME1063	R,Metal 1/4W 182Ω ±1%	1
	RME1063	R,Metal 1/4W 182Ω ±1%	1

SYMBOL	PART CODE	DESCRIPTION	Q'TY
R553	RME1063	R,Metal 1/4W 182Ω ±1%	1
R554	RME1063	R,Metal 1/4W 182Ω ±1%	1
R555	RME1104	R,Metal 1/4W 51.1Ω ±1%	1
R556	RME0863	R,Metal,Chip 1/8W 82Ω ±5%	1
R557	RME0883	R,Metal,Chip 1/8W 3.9kΩ ±5%	1
R558	RME0888	R,Metal,Chip 1/8W 10kΩ ±5%	1
R559	RME0871	R,Metal,Chip 1/8W 390Ω ±5%	1
R560	RCE0717	R,Carbon 1/2W 10kΩ ±5%	1
R561	RME0880	R,Metal,Chip 1/8W 2.2kΩ ±5%	1
R563	RME0863	R,Metal,Chip 1/8W 82Ω ±5%	1
R564	RME0863	R,Metal,Chip 1/8W 82Ω ±5%	1
R565	RMR4032	R,Metal (w/o Fin)2W 390Ω ±2%	1
R566	RMR4032	R,Metal (w/o Fin)2W 390Ω ±2%	1
R571A	RME0871	R,Metal,Chip 1/8W 390Ω ±5%	1
R572A	RME0871	R,Metal,Chip 1/8W 390Ω ±5%	1
R573	RME0888	R,Metal,Chip 1/8W 10kΩ ±5%	1
R574	RME0890	R,Metal,Chip 1/8W 15kΩ ±5%	1
R575	RME0874	R,Metal,Chip 1/8W 680Ω ±5%	1
R576	RME0863	R,Metal,Chip 1/8W 82Ω ±5%	1
R577	RME0894	R,Metal,Chip 1/8W 33kΩ ±5%	1
R578	RME1077	R,Metal 1/4W 2.67kΩ ±1%	1
R579	RME1077	R,Metal 1/4W 2.67kΩ ±1%	1
R580	RME0876	R,Metal,Chip 1/8W 1.0kΩ ±5%	1
R581	RME0878	R,Metal,Chip 1/8W 1.5kΩ ±5%	1
R582	RME0878	R,Metal,Chip 1/8W 1.5kΩ ±5%	1
R590	RME0860	R,Metal,Chip 1/8W 47Ω ±5%	1
R591	RME0884	R,Metal,Chip 1/8W 4.7kΩ ±5%	1
R592	RME0900	R,Metal,Chip 1/8W 100kΩ ±5%	1
R593	RME0896	R,Metal,Chip 1/8W 47kΩ ±5%	1
R594	RME0868	R,Metal,Chip 1/8W 220Ω ±5%	1
R1301	RME1198	R,Metal,Chip 1/8W 390kΩ ±5%	1
R1302	RME0895	R,Metal,Chip 1/8W 39kΩ ±5%	1
R1303	RME1174	R,Metal 1/4W 2.00kΩ ±1%	1
R1304	RME0860	R,Metal,Chip 1/8W 47Ω ±5%	1
R1305	RME1065	R,Metal 1/4W 267Ω ±1%	1
RV505	RNE0048	VR,Metal EVN 39C00YB22(200)	1
RV574	RNE0051	VR,Metal EVN 39C00YB14(10k)	1
RV576	RNE0049	VR,Metal EVN 39C00YB12(100)	1
RV1303	RNE0050	VR,Metal EVN 39C00YB52(500)	1
TR501	HTC0907	Transistor,Chip 2SC3775 OY	1
TR502	HTC0907	Transistor,Chip 2SC3775 OY	1
TR503	HTC0907	Transistor,Chip 2SC3775 OY	1
TR504	HTC0907	Transistor,Chip 2SC3775 OY	1
TR541	HTC0885	Transistor 2SC2407(1)	1
TR542	HTC0885	Transistor 2SC2407(1)	1
TR561A	HTC0397	Transistor 2SC1252N	1
TR562A	HTC0397	Transistor 2SC1252N	1
TR571	HTC0686	Transistor,Chip 2SC2462LC	1
TR572	HTC0686	Transistor,Chip 2SC2462LC	1
TR591	HTC0686	Transistor,Chip 2SC2462LC	1

PEF-786 DLY 1

SYMBOL	PART CODE	DESCRIPTION	Q'TY
P491	JBX2203	Connector 03JQ-ST	1

PEF-788 DLY 3

SYMBOL	PART CODE	DESCRIPTION	Q'TY
C501	CCG0120	C,Ceramic,Chip 50V 6pF ±0.5pF	1
C502	CCG0120	C,Ceramic,Chip 50V 6pF ±0.5pF	1
L501	TLN0004	Coil 0.10μH 450MA ±20%	1
L502	TLN0004	Coil 0.10μH 450MA ±20%	1
P492	JBX2210	Connector 05JQ-ST	1

PEF-789 CRT SOCKET 1

SYMBOL	PART CODE	DESCRIPTION	Q'TY
C1044	CCD0231	C,Ceramic 2000V 4700pF +80% -20%	1
C1045	CCC1025	C,Ceramic 50V 100pF ±10%	1
J1001	8390152	Socket 1339	1
L1061	TLE0107	Inductor ELE-V R47 MA	1
L1062	TLE0107	Inductor ELE-V R47 MA	1
NL1043	ELS0032	Lamp SA-200DSS-ON-1	1
P1001	JBS0022	Connector S3B-XH-A	1
P1043	JBB0022	Connector B6B-XH-A	1
P1061	ETP0002	Pin 171255-1	1
P1062	ETP0002	Pin 171255-1	1
P1281	JBB0021	Connector B3B-XH-A	1
R1061	RME1722	R,Metal 1/4W 165Ω ±1%	1
R1062	RME1722	R,Metal 1/4W 165Ω ±1%	1
R1066	RCE0781	R,Carbon 1/4W 10kΩ ±5%	1
R1067	RCE0745	R,Carbon 1/4W 10Ω ±5%	1

PEF-816 FILTER

SYMBOL	PART CODE	DESCRIPTION	Q'TY
C1501	CQE0118	C,Plastic ECQ-E2A224MW (0.22μF)	1
SG1501	EZH0084	Spark Gap AG20 P C 252F-L3N	1
SG1502	EZH0084	Spark Gap AG20 P C 252F-L3N	1

EF-839 ROM PG

MBOL	PART CODE	DESCRIPTION	Q'TY
	IYX0041	IC Socket 10628-01-445	1
	IYT0003	SEAL (ROM) 11X11MM T-TYPE MAT SILVER	1
001	CCG0211	C,Ceramic,Chip 50V 10000pF ±10%	1
002	CCG0211	C,Ceramic,Chip 50V 10000pF ±10%	1
003	CCG0211	C,Ceramic,Chip 50V 10000pF ±10%	1
004	CCG0211	C,Ceramic,Chip 50V 10000pF ±10%	1
005	CCG0211	C,Ceramic,Chip 50V 10000pF ±10%	1
006	CCG0211	C,Ceramic,Chip 50V 10000pF ±10%	1
007	CCG0179	C,Ceramic,Chip 50V 150pF ±5%	1
010	CCG0205	C,Ceramic,Chip 50V 1000pF ±5%	1
011	CCG0205	C,Ceramic,Chip 50V 1000pF ±5%	1
012	CCG0205	C,Ceramic,Chip 50V 1000pF ±5%	1
013	CCG0205	C,Ceramic,Chip 50V 1000pF ±5%	1
014	CCG0205	C,Ceramic,Chip 50V 1000pF ±5%	1
015	CCG0179	C,Ceramic,Chip 50V 150pF ±5%	1
016	CCG0179	C,Ceramic,Chip 50V 150pF ±5%	1
101	CCG0136	C,Ceramic,Chip 50V 33pF ±5%	1
102	CCG0136	C,Ceramic,Chip 50V 33pF ±5%	1
105	CCG0213	C,Ceramic,Chip 50V 0.1µF +80% -20%	1
106	CCG0213	C,Ceramic,Chip 50V 0.1µF +80% -20%	1
107	CES0133	C,AL Elyc 16V 47µF ±20%	1
108	CCG0211	C,Ceramic,Chip 50V 1000pF ±10%	1
109	CCG0211	C,Ceramic,Chip 50V 1000pF ±10%	1
203	CCC1030	C,Ceramic, 50V 0.01µF +80% -20%	1
210	CCG0211	C,Ceramic,Chip 50V 0.01µF ±10%	1
211	CCG0211	C,Ceramic,Chip 50V 0.01µF ±10%	1
212	CCG0211	C,Ceramic,Chip 50V 0.01µF ±10%	1
3001	IDH1292	IC,Digital HN27256G-25	1
3002	IDH1051	IC,Digital HD74HC74P	1
3003	IDH1274	IC,Digital HD74HC573P/TC74HC573P	1
3004	IDH1275	IC,Digital HD74HC574P/TC74HC574P	1
3005	IDH1275	IC,Digital HD74HC574P/TC74HC574P	1
3006	IDH1019	IC,Digital HD74HC32P	1
3007	IDM0568	IC,Digital MN1280-N	1
3101	IDM0685	IC,Digital µPD78C10G-36	1
3210	IDH0725	IC,Digital HM6116LP-4	1
3211	IDH1149	IC,Digital HD74HC155P	1
3212	IDH0982	IC,Digital HD74HC00P/TC74HC00P	1
3001	JBS0027	Connector SQ-8-AP-GB-C	1
3002	JBS0027	Connector SQ-8-AP-GB-C	1
3003	JBS0027	Connector SQ-8-AP-GB-C	1
3004	JBS0027	Connector SQ-8-AP-GB-C	1
3005	JBS0027	Connector SQ-8-AP-GB-C	1
3006	JBS0027	Connector SQ-8-AP-GB-C	1
3007	JBS0027	Connector SQ-8-AP-GB-C	1
3008	JBS0027	Connector SQ-8-AP-GB-C	1
3201	JDB0058	Connector 12B-XH-A	1
3002	RME0892	R,Metal,Chip 1/8W 22kΩ ±5%	1
3003	RME0892	R,Metal,Chip 1/8W 22kΩ ±5%	1
3004	RME0892	R,Metal,Chip 1/8W 22kΩ ±5%	1
3005	RME0884	R,Metal,Chip 1/8W 4.7kΩ ±5%	1
3006	RME0884	R,Metal,Chip 1/8W 4.7kΩ ±5%	1
3010	RME0875	R,Metal,Chip 1/8W 820Ω ±5%	1
3011	RME0875	R,Metal,Chip 1/8W 820Ω ±5%	1
3012	RME0875	R,Metal,Chip 1/8W 820Ω ±5%	1
3013	RME0875	R,Metal,Chip 1/8W 820Ω ±5%	1

SYMBOL	PART CODE	DESCRIPTION	Q'TY
R3014	RME0875	R,Metal,Chip 1/8W 820Ω ±5%	1
R3015	RME0875	R,Metal,Chip 1/8W 820Ω ±5%	1
R3016	RME0875	R,Metal,Chip 1/8W 820Ω ±5%	1
R3017	RME0875	R,Metal,Chip 1/8W 820Ω ±5%	1
R3018	RME0875	R,Metal,Chip 1/8W 820Ω ±5%	1
R3101	RME0906	R,Metal,Chip 1/8W 1.0MΩ ±5%	1
R3211	RME0876	R,Metal 1/8W 1.0KΩ ±5%	1
R3213	RME0896	R,Metal 1/8W 47KΩ ±5%	1
R3215	RME0875	R,Metal 1/8W 820Ω ±5%	1
R3216	RME0875	R,Metal 1/8W 820Ω ±5%	1
R3217	RME0875	R,Metal 1/8W 820Ω ±5%	1
R3218	RME0875	R,Metal 1/8W 820Ω ±5%	1
R3219	RME0875	R,Metal 1/8W 820Ω ±5%	1
R3220	RME0875	R,Metal 1/8W 820Ω ±5%	1
R3221	RME0875	R,Metal 1/8W 820Ω ±5%	1
R3222	RME0875	R,Metal 1/8W 820Ω ±5%	1
TR3001	HTA0224	Transistor 2SA10229D	1
X3101	EZZ0101	Extal CSA 12.0MT	1

PEF-833 ATT R/O

SYMBOL	PART CODE	DESCRIPTION	Q'TY
RM53	RZA0202	R,Block EXB-LE5-502S	2

PEF-837 CYCLE

SYMBOL	PART CODE	DESCRIPTION	Q'TY
C2003	CES0033	C,AL Elyc 25V 100μF ±20%	1
C2005	CQA0121	C,Plastic 50V 33000pF ±10%	1
C2006	CQA0122	C,Plastic 50V 47000pF ±10%	1
C2007	CES0378	C,AL Elyc 16V 330μF ±20%	1
C2008	CES0378	C,AL Elyc 16V 330μF ±20%	1
C2012	CMD0947	C,Mica 300V 470pF ±5%	1
C2013	CQE0116	C,Plastic 100V 0.47μF ±5%	1
C2014	CCG0211	C,Ceramic,Chip 50V 10000pF ±10%	1
C2015	CCG0213	C,Ceramic,Chip 50V 0.1μF +80% -20%	1
C2016	CCG0211	C,Ceramic,Chip 50V 10000pF ±10%	1
C2017	CQA0132	C,Plastic 50V 0.33μF ±10%	1
C2038	CQA0132	C,Plastic 50V 0.33μF ±10%	1
C2039	CCG0213	C,Ceramic,Chip 50V 0.1μF +80% -20%	1
C2042	CCG0207	C,Ceramic,Chip 50V 2200pF ±10%	1
C2043	CEC0038	C,AL Elyc 50V 2.2μF ±20%	1
C2050	CCG0211	C,Ceramic,Chip 50V 10000pF ±10%	1
C2051	CCG0211	C,Ceramic,Chip 50V 10000pF ±10%	1
C2052	CCG0211	C,Ceramic,Chip 50V 10000pF ±10%	1
C2060	CCG0136	C,Ceramic,Chip 50V 33pF ±5%	1
C2061	CCG0211	C,Ceramic,Chip 50V 10000pF ±5%	1
C2070	CES0133	C,AL Elyc 16V 47μF ±20%	1
C2071	CES0133	C,AL Elyc 16V 47μF ±20%	1
C2072	CES0133	C,AL Elyc 16V 47μF ±20%	1
C2092	CCG0144	C,Ceramic,Chip 50V 220pF ±5%	1
D2004	HDS0437	Diode 1SS 133	1
D2020	HDM0139	Diode MTZ 3.3JA	1
IC2040	ILT0045	IC,Analog TL064CN	1
IC2050	ILN0085	IC,Analog NJM 319D	1
IC2052	IDH0467	IC,Degital HD74LS74AP	1
IC2090	HTD0161	Transistor,Chip DTC124K	1
IC2091	HTD0161	Transistor,Chip DTC124K	1
L2092	TLE0072	Coil EL0606SKI 220μF±10%	1
P2001	JBS0071	Connector SQ-10-AP-GB-C	1
P2002	JBS0027	Connector SQ-8-AP-GB-C	1
R2001	RME0884	R,Metal,Chip 1/8W 4.7kΩ ±5%	1
R2002	RME0902	R,Metal,Chip 1/8W 220kΩ ±5%	1
R2003	RME0869	R,Metal,Chip 1/8W 270Ω ±5%	1
R2004	RME0884	R,Metal,Chip 1/8W 4.7kΩ ±5%	1
R2005	RCE1716	R,Carbon 1/8W 2.2MΩ ±10%	1
R2006	RME1716	R,Metal,Chip 1/8W 2.2MΩ ±10%	1
R2007	RME1064	R,Metal 1/4W 221Ω ±1%	1
R2010	RME0880	R,Metal,Chip 1/8W 2.2kΩ ±5%	1
R2011	RME0882	R,Metal,Chip 1/8W 3.3kΩ ±5%	1
R2012	RME0896	R,Metal,Chip 1/8W 47kΩ ±5%	1
R2013	RME0880	R,Metal,Chip 1/8W 2.2kΩ ±5%	1
R2014	RME0892	R,Metal,Chip 1/8W 22kΩ ±5%	1
R2015	RME0896	R,Metal,Chip 1/8W 47kΩ ±5%	1
R2017	RME0912	R,Metal,Chip 1/8W 0Ω	1
R2020	RCE0716	R,Carbon 1/2W 8.2kΩ ±5%	1
R2021	RME1714	R,Metal 1/4W 221kΩ ±0.5%	1
R2022	RME1713	R,Metal 1/4W 22.1kΩ ±0.5%	1
R2023	RME0884	R,Metal,Chip 1/8W 4.7kΩ ±5%	1
R2024	RME0888	R,Metal,Chip 1/8W 10kΩ ±5%	1
R2025	RME1712	R,Metal 1/4W 2.21kΩ ±0.5%	1
R2026	RME0884	R,Metal,Chip 1/8W 4.7kΩ ±5%	1
R2027	RME0888	R,Metal,Chip 1/8W 10kΩ ±5%	1

SYMBOL	PART CODE	DESCRIPTION	Q'TY
R2029	RME0855	R,Metal,Chip 1/8W 18Ω ±5%	1
R2030	RME0864	R,Metal,Chip 1/8W 100Ω ±5%	1
R2031	RME1098	R,Metal 1/4W 150kΩ ±1%	1
R2032	RME1086	R,Metal 1/4W 15kΩ ±1%	1
R2033	RME0884	R,Metal,Chip 1/8W 4.7kΩ ±5%	1
R2034	RME0888	R,Metal,Chip 1/8W 10kΩ ±5%	1
R2035	RME1074	R,Metal 1/4W 1.5kΩ ±1%	1
R2036	RME0884	R,Metal,Chip 1/8W 4.7kΩ ±5%	1
R2037	RME0888	R,Metal,Chip 1/8W 10kΩ ±5%	1
R2038	RME1090	R,Metal 1/4W 33.2kΩ ±1%	1
R2039	RME1090	R,Metal 1/4W 33.2kΩ ±1%	1
R2040	RME0878	R,Metal,Chip 1/8W 1.5kΩ ±1%	1
R2041	RME0875	R,Metal,Chip 1/8W 820Ω ±5%	1
R2043	RME0880	R,Metal,Chip 1/8W 2.2kΩ ±5%	1
R2045	RME0912	R,Metal,Chip 0Ω	1
R2052	RME0881	R,Metal,Chip 1/8W 2.7kΩ ±5%	1
R2054	RME0869	R,Metal,Chip 1/8W 270Ω ±5%	1
R2055	RME0902	R,Metal,Chip 1/8W 220kΩ ±5%	1
R2060	RME0869	R,Metal,Chip 1/8W 270Ω ±5%	1
R2061	RME1077	R,Metal 1/4W 2.67kΩ ±1%	1
R2062	RME1083	R,Metal 1/4W 8.25kΩ ±1%	1
R2063	RME0880	R,Metal,Chip 1/8W 2.2kΩ ±5%	1
R2065	RME0872	R,Metal,Chip 1/8W 470Ω ±5%	1
R2080	RME1290	R,Metal 1/4W 1.1kΩ ±1%	1
R2081	RME1078	R,Metal 1/4W 3.32kΩ ±1%	1
R2082	RME1718	R,Metal,Chip 1/8W 5.6MΩ ±10%	1
R2085	RME0880	R,Metal,Chip 1/8W 2.2kΩ ±5%	1
R2092	RME0892	R,Metal,Chip 1/8W 22kΩ ±5%	1
R2093	RME0876	R,Metal,Chip 1/8W 1.0kΩ ±5%	1
R2094	RME0876	R,Metal,Chip 1/8W 1.0kΩ ±5%	1
R2095	RME0882	R,Metal,Chip 1/8W 3.3kΩ ±5%	1
TR2010	HTC0590	Transistor,Chip 2SC1621B4	1
TR2013	HTC0686	Transistor,Chip 2SC2462LC	1
TR2015	HTA0263	Transistor,Chip 2SA1052MD	1
TR2022	HTB0177	Transistor,Chip 2SB624BV3	1
TR2025	HTB0177	Transistor,Chip 2SB624BV3	1
TR2032	HTB0177	Transistor,Chip 2SB624BV3	1
TR2035	HTB0177	Transistor,Chip 2SB624BV3	1
TR2038	HTC0813	Transistor,Chip 2SC2853E	1
TR2040	HTC0590	Transistor,Chip 2SC1621B4	1
TR2043	HTD0202	Transistor,Chip 2SD596DV3	1
TR2045	HTA0263	Transistor,Chip 2SA1052MD	1
TR2060	HTK0160	Transistor,Chip 2SK303V4	1
TR2063	HTC0686	Transistor,Chip 2SC2462LC	1
TR2080	HTA0263	Transistor,Chip 2SA1052MD	1

EF-828 V-INTERFACE

MBOL	PART CODE	DESCRIPTION	Q'TY
000	CCG0117	C,Ceramic 50V 3pF±0.2pF CJ	1
012	CCG0117	C,Ceramic 50V 3pF±0.2pF CJ	1
024	CES0133	C,Al Elyc 16V 47µF ±20%	1
032	CCG0121	C,Ceramic 50V 7pF±0.5pF CH	1
033	CCG0121	C,Ceramic 50V 7pF±0.5pF CH	1
047	CCG0123	C,Ceramic,Chip 50V 9pF±0.5pF	1
051	CES0133	C,Al Elyc 16V 47µF ±20%	1
056	CCG0211	C,Ceramic 50V 10000pF ±10%	1
070	CES0133	C,Al Elyc 16V 47µF ±20%	1
071	CES0133	C,Al Elyc 16V 47µF ±20%	1
074	CES0133	C,Al Elyc 16V 47µF ±20%	1
082	CCG0121	C,Ceramic 50V 7pF ±0.5% CH	1
083	CCG0121	C,Ceramic 50V 7pF ±0.5% CH	1
087	CCG0126	C,Ceramic 50V 12pF ±5%	1
091	CES0133	C,Al Elyc 16V 47µF ±20%	1
096	CCG0211	C,Ceramic 50V 10000pF ±10%	1
5034	CVE0059	C,Variable ECR-HA010A41(10pF)	1
5035	CVE0060	C,Variable ECR-HA020D41(20pF)	1
5078	CVE0059	C,Variable ECR-HA010A41(10pF)	1
5079	CVE0060	C,Variable ECR-HA020D41(20pF)	1
000	HDD0159	Diode DCA010	1
001	HDS0437	Diode 1SS133	1
011	HDS0437	Diode 1SS133	1
012	HDD0159	Diode DCA010	1
022	HDD0159	Diode DCA010	1
023	HDD0159	Diode DCA010	1
024	HDS0437	Diode 1SS133	1
062	HDD0159	Diode DCA010	1
063	HDD0159	Diode DCA010	1
072	HDD0159	Diode DCA010	1
073	HDD0159	Diode DCA010	1
074	HDS0437	Diode 1SS133	1
000	JBX2081	Connector 5124-02BHPB	1
001	JBX2081	Connector 5124-02BHPB	1
002	JBX2081	Connector 5124-02BHPB	1
006	JBX2206	Connector 5124-15BHPB	1
5030	RME0912	R,Metal 0Ω	1
5040	RME0870	R,Metal 1/8W 330Ω ±5%	1
5080	RME0912	R,Metal 0Ω	1
5090	RME0870	R,Metal 1/8W 330Ω ±5%	1
070	TLE0173	Coil ELO607SKI 101k (100µH)	1
071	TLE0173	Coil ELO607SKI 101k (100µH)	1
13	JBB0024	Connector B15B-XH-A	1
003	JBS0022	Connector S3B-XH-A	1
004	JBS0022	Connector S3B-XH-A	1
007	JBS0050	Connector SLEM15R-2	1
000	RME0883	R,Metal 1/8W 3.9kΩ ±5%	1
001	RME0887	R,Metal 1/8W 8.2kΩ ±5%	1
002	RME1065	R,Metal 1/4W 267Ω ±1%	1
002A	RME1209	R,Metal 1/4W 11.1kΩ ±0.5%	1
003	RME1077	R,Metal 1/4W 2.67kΩ ±1%	1
004	RME1068	R,Metal 1/4W 475Ω ±1%	1
005	RME1068	R,Metal 1/4W 475Ω ±1%	1
006	RME0896	R,Metal 1/8W 47kΩ ±5%	1
007	RME1067	R,Metal 1/4W 392Ω ±1%	1
008	RME0880	R,Metal 1/8W 2.2kΩ ±5%	1
012	RME0883	R,Metal 1/8W 3.9kΩ ±5%	1

SYMBOL	PART CODE	DESCRIPTION	Q'TY
R5013	RME0887	R,Metal 1/8W 8.2kΩ ±5%	1
R5016	RME0896	R,Metal 1/8W 47kΩ ±5%	1
R5018	RME0880	R,Metal 1/8W 2.2kΩ ±5%	1
R5020	RME1075	R,Metal 1/4W 1.82kΩ ±1%	1
R5021	RME1085	R,Metal 1/4W 12.1kΩ ±1%	1
R5021A	RME0912	R,Metal 0Ω	1
R5022	RME1068	R,Metal 1/4W 475Ω ±1%	1
R5023	RME1068	R,Metal 1/4W 475Ω ±1%	1
R5024	RME1074	R,Metal 1/4W 1.50kΩ ±1%	1
R5025	RME1079	R,Metal 1/4W 3.92kΩ ±1%	1
R5025A	RME0912	R,Metal 0Ω	1
R5026	RME0872	R,Metal 1/8W 470Ω ±5%	1
R5027	RME0872	R,Metal 1/8W 470Ω ±5%	1
R5028	RME1253	R,Metal 1/4W 301Ω ±1%	1
R5029	RME1253	R,Metal 1/4W 301Ω ±1%	1
R5030	RME1064	R,Metal 1/4W 221Ω ±1%	1
R5031	RME1064	R,Metal 1/4W 221Ω ±1%	1
R5032	RME0852	R,Metal 1/8W 10Ω ±5%	1
R5033	RME0852	R,Metal 1/8W 10Ω ±5%	1
R5034	RME0862	R,Metal 1/8W 68Ω ±5%	1
R5035	RME0861	R,Metal 1/8W 56Ω ±5%	1
R5044	RME1067	R,Metal 1/4W 392Ω ±1%	1
R5045	RME0877	R,Metal 1/8W 1.2kΩ ±5%	1
R5046	RME0877	R,Metal 1/8W 1.2kΩ ±5%	1
R5047	RME0868	R,Metal 1/8W 220Ω ±5%	1
R5049	RME1060	R,Metal 1/4W 100Ω ±1%	1
R5050	RME1071	R,Metal 1/4W 825Ω ±1%	1
R5051	RME1071	R,Metal 1/4W 825Ω ±1%	1
R5052	RME0882	R,Metal 1/8W 3.3kΩ ±5%	1
R5053	RME1106	R,Metal 1/4W 75Ω ±1%	1
R5054	RME1106	R,Metal 1/4W 75Ω ±1%	1
R5055	RCE0767	R,Carbon 1/4W 680Ω ±5%	1
R5056	RCE0767	R,Carbon 1/4W 680Ω ±5%	1
R5060	RME1075	R,Metal 1/4W 1.82kΩ ±1%	1
R5061	RME1085	R,Metal 1/4W 12.1kΩ ±1%	1
R5061A	RME0912	R,Metal 0Ω	1
R5062	RME1068	R,Metal 1/4W 475Ω ±1%	1
R5063	RME1068	R,Metal 1/4W 475Ω ±1%	1
R5070	RME1075	R,Metal 1/4W 1.82kΩ ±1%	1
R5071	RME1085	R,Metal 1/4W 12.1kΩ ±1%	1
R5071A	RME0912	R,Metal 0Ω	1
R5072	RME1068	R,Metal 1/4W 475Ω ±1%	1
R5073	RME1068	R,Metal 1/4W 475Ω ±1%	1
R5074	RME1074	R,Metal 1/4W 1.50kΩ ±1%	1
R5075	RME1079	R,Metal 1/4W 3.92kΩ ±1%	1
R5075A	RME0912	R,Metal 0Ω	1
R5076	RME1253	R,Metal 1/4W 301Ω ±1%	1
R5077	RME1253	R,Metal 1/4W 301Ω ±1%	1
R5078	RME0862	R,Metal 1/8W 68Ω ±5%	1
R5079	RME0861	R,Metal 1/8W 56Ω ±5%	1
R5080	RME1064	R,Metal 1/4W 221Ω ±1%	1
R5081	RME1064	R,Metal 1/4W 221Ω ±1%	1
R5082	RME0852	R,Metal 1/8W 10Ω ±5%	1
R5083	RME0852	R,Metal 1/8W 10Ω ±5%	1
R5084	RME1067	R,Metal 1/4W 392Ω ±1%	1
R5085	RME0877	R,Metal 1/8W 1.2kΩ ±5%	1
R5086	RME0877	R,Metal 1/8W 1.2kΩ ±5%	1
R5087	RME0867	R,Metal 1/8W 180Ω ±5%	1
R5089	RME1060	R,Metal 1/4W 100Ω ±1%	1
R5090	RME1071	R,Metal 1/4W 825Ω ±1%	1
R5091	RME1071	R,Metal 1/4W 825Ω ±1%	1
R5092	RME0882	R,Metal 1/8W 3.3kΩ ±5%	1
R5093	RME1106	R,Metal 1/4W 75Ω ±1%	1

SYMBOL	PART CODE	DESCRIPTION	Q'TY
R5094	RME1106	R,Metal 1/4W 75Ω ±1%	1
R5095	RCE0767	R,Carbon 1/4W 680Ω ±5%	1
R5096	RCE0767	R,Carbon 1/4W 680Ω ±5%	1
TR5000	HTC0686	Transistor 2SC2462C	1
TR5001	HTC0686	Transistor 2SC2462C	1
TR5012	HTC0686	Transistor 2SC2462C	1
TR5020	HTC0686	Transistor 2DV2462C	1
TR5024	HTC0686	Transistor 2DC2462C	1
TR5030	HTA0344	Transistor 2SA1245	1
TR5031	HTA0344	Transistor 2SA1245	1
TR5045	HTA0318	Transistor 2SA1462Y34	1
TR5046	HTA0318	Transistor 2SA1462Y34	1
TR5060	HTC0686	Transistor 2SC2462C	1
TR5070	HTC0686	Transistor 2SC2462C	1
TR5074	HTC0686	Transistor 2SC2462C	1
TR5080	HTA0344	Transistor 2SA1245	1
TR5081	HTA0344	Transistor 2SA1245	1
TR5085	HTA0318	Transistor 2SA1462Y34	1
TR5086	HTA0318	Transistor 2SA1462Y34	1

PEF-834 S/H & P/D

SYMBOL	PART CODE	DESCRIPTION	Q'TY
1F	IDM0583	IC,Digital MC10H125L	1
1K	IDM0583	IC,Digital MC10H125L	1
1L	IDS0421	IC,Digital SN74LS33N/MB74LS33	1
2F	IDM0583	IC,Digital MC10H125L	1
2G	IDH0875	IC,Digital HD74LS374P	1
2H	IDH0875	IC,Digital HD74LS374P	1
2J	IDH0875	IC,Digital HD74LS374P	1
2J	IDH0875	IC,Digital HD74LS374P	1
2K	IDM0583	IC,Digital MC10H125L	1
3F	IDS0445	IC,Digital SN74AS374N	1
3K	IDS0445	IC,Digital SN74AS374N	1
3M	IDH0471	IC,Digital HD74LS04P	1
4A	IDS0452	IC,Digital SN74AS153N	1
4B	IDH0824	IC,Digital HD74LS85P	1
4C	IDH0824	IC,Digital HD74LS85P	1
4D	IDS0452	IC,Digital SN74AS153N	1
4E	IDS0444	IC,Digital SN74AS00N	1
5A	IDS0446	IC,Digital SN74AS08N	1
1D	IDH0875	IC,Digital HD74LS374P	1
1E	IDH0875	IC,Digital HD74LS374P	1
3D	IDH0875	IC,Digital HD74LS374P	1
3E	IDH0875	IC,Digital HD74LS374P	1
1A	IDH0824	IC,Digital HD74LS85P	1
1B	IDH0824	IC,Digital HD74LS85P	1

SYMBOL	PART CODE	DESCRIPTION	Q'TY
1C	IDH0824	IC,Digital HD74LS85P	1
2A	IDH0824	IC,Digital HD74LS85P	1
3B	IDH0824	IC,Digital HD74LS85P	1
3C	IDH0824	IC,Digital HD74LS85P	1
5C	IDS0455	IC,Digital SN74AS74N	1
5D	IDS0455	IC,Digital SN74AS74N	1
5E	IDS0455	IC,Digital SN74AS74N	1
C8045	CEK0078	C,Al Elyc 16V 47μF ±20%	1
C8046	CEK0078	C,Al Elyc 16V 47μF ±20%	1
C8047	CEK0078	C,Al Elyc 16V 47μF ±20%	1
C8000	CCG0292	C,Ceramic 50V 0.01μF ±10%	1
C8001	CCG0292	C,Ceramic 50V 0.01μF ±10%	1
C8002	CCG0292	C,Ceramic 50V 0.01μF ±10%	1
C8003	CCG0292	C,Ceramic 50V 0.01μF ±10%	1
C8004	CCG0292	C,Ceramic 50V 0.01μF ±10%	1
C8005	CCG0292	C,Ceramic 50V 0.01μF ±10%	1
C8006	CCG0292	C,Ceramic 50V 0.01μF ±10%	1
C8007	CCG0292	C,Ceramic 50V 0.01μF ±10%	1
C8049	CCG0272	C,Ceramic 50V 68pF ±5%	1
C8050	CCG0272	C,Ceramic 50V 68pF ±5%	1
C8060	CCG0286	C,Ceramic 50V 1000pF ±10%	1
C8061	CCG0247	C,Ceramic 50V 2pF±0.25pF	1
C8062	CCG0286	C,Ceramic 50V 1000pF ±10%	1
C8063	CCG0255	C,Ceramic 50V 10pF ±0.5pF	1
C8064	CCG0254	C,Ceramic 50V 9pF ±0.5pF	1
C8065	CCG0259	C,Ceramic 50V 15pF ±5%	1
C8067	CCG0292	C,Ceramic 50V 0.01μF ±10%	1
C8068	CCG0286	C,Ceramic 50V 1000pF ±10%	1
C8069	CCG0292	C,Ceramic 50V 0.01μF ±10%	1
C8071	CCG0294	C,Ceramic 50V 47000pF +80% -20%	1
C8074	CCG0294	C,Ceramic 50V 47000pF +80% -20%	1
C8075	CCG0294	C,Ceramic 50V 47000pF +80% -20%	1
C8076	CCG0286	C,Ceramic 50V 1000pF ±10%	1
C8077	CCG0294	C,Ceramic 50V 47000pF +80% -20%	1
C8080	CCG0267	C,Ceramic 50V 33pF ±5%	1
C8130	CCG0286	C,Ceramic 50V 1000pF ±10%	1
C8131	CCG0247	C,Ceramic 50V 2pF±0.25pF	1
C8132	CCG0286	C,Ceramic 50V 1000pF ±10%	1
C8133	CCG0255	C,Ceramic 50V 10pF ±0.5pF	1
C8134	CCG0254	C,Ceramic 50V 9pF ±0.5pF	1
C8135	CCG0259	C,Ceramic 50V 15pF ±5%	1
C8137	CCG0292	C,Ceramic 50V 0.01μF ±10%	1
C8138	CCG0286	C,Ceramic 50V 1000pF ±10%	1
C8139	CCG0292	C,Ceramic 50V 0.01μF ±10%	1
C8141	CCG0294	C,Ceramic 50V 47000pF +80% -20%	1
C8144	CCG0294	C,Ceramic 50V 47000pF +80% -20%	1
C8145	CCG0294	C,Ceramic 50V 47000pF +80% -20%	1
C8146	CCG0286	C,Ceramic 50V 1000pF ±10%	1
C8147	CCG0294	C,Ceramic 50V 47000pF +80% -20%	1
C8150	CCG0267	C,Ceramic 50V 33pF ±5%	1
C8008	CCG0292	C,Ceramic 50V 0.01μF ±10%	1
C8009	CCG0292	C,Ceramic 50V 0.01μF ±10%	1
C8010	CCG0292	C,Ceramic 50V 0.01μF ±10%	1
C8011	CCG0292	C,Ceramic 50V 0.01μF ±10%	1

MBOL	PART CODE	DESCRIPTION	Q'TY
3012	CCG0292	C,Ceramic 50V 0.01μF ±10%	1
3013	CCG0292	C,Ceramic 50V 0.01μF ±10%	1
3014	CCG0292	C,Ceramic 50V 0.01μF ±10%	1
3015	CCG0292	C,Ceramic 50V 0.01μF ±10%	1
3016	CCG0292	C,Ceramic 50V 0.01μF ±10%	1
3017	CCG0292	C,Ceramic 50V 0.01μF ±10%	1
3018	CCG0292	C,Ceramic 50V 0.01μF ±10%	1
3019	CCG0292	C,Ceramic 50V 0.01μF ±10%	1
3020	CCG0292	C,Ceramic 50V 0.01μF ±10%	1
3021	CCG0292	C,Ceramic 50V 0.01μF ±10%	1
3022	CCG0292	C,Ceramic 50V 0.01μF ±10%	1
3023	CCG0292	C,Ceramic 50V 0.01μF ±10%	1
3024	CCG0292	C,Ceramic 50V 0.01μF ±10%	1
3025	CCG0292	C,Ceramic 50V 0.01μF ±10%	1
3026	CCG0292	C,Ceramic 50V 0.01μF ±10%	1
3027	CCG0292	C,Ceramic 50V 0.01μF ±10%	1
3028	CCG0292	C,Ceramic 50V 0.01μF ±10%	1
3029	CCG0292	C,Ceramic 50V 0.01μF ±10%	1
3030	CCG0292	C,Ceramic 50V 0.01μF ±10%	1
3031	CCG0292	C,Ceramic 50V 0.01μF ±10%	1
3032	CCG0292	C,Ceramic 50V 0.01μF ±10%	1
3033	CCG0292	C,Ceramic 50V 0.01μF ±10%	1
3034	CCG0292	C,Ceramic 50V 0.01μF ±10%	1
3035	CCG0292	C,Ceramic 50V 0.01μF ±10%	1
3036	CCG0292	C,Ceramic 50V 0.01μF ±10%	1
3037	CCG0292	C,Ceramic 50V 0.01μF ±10%	1
3038	CCG0292	C,Ceramic 50V 0.01μF ±10%	1
3039	CCG0292	C,Ceramic 50V 0.01μF ±10%	1
3078	CEK0078	C,AL Elyc 16V 47μF ±20%	1
3079	CEK0078	C,AL Elyc 16V 47μF ±20%	1
3148	CEK0078	C,AL Elyc 16V 47μF ±20%	1
3149	CEK0078	C,AL Elyc 16V 47μF ±20%	1
8045	AFD0010	Fil DST310-55D223S	1
8046	AFD0010	Fil DST310-55D223S	1
8047	AFD0010	Fil DST310-55D223S	1
3060	HDH0236	Diode HZM7C-TR	1
3061	HDH0224	Diode HSM88S	1
3062	HDH0224	Diode HSM88S	1
3063	HDH0224	Diode HSM88S	1
3064	HDH0224	Diode HSM88S	1
3065	HDS0496	Diode 1SS123	1
3066	HDH0224	Diode HSM88S	1
3067	HDS0496	Diode 1SS123	1
3068	HDS0538	Diode 1SS153	1
3069	HDH0230	Diode ZENNER HZM5B	1
3070	HDS538	Diode 1SS153	1
3071	HDH0235	Diode HZM4B-TR	1
3130	HDH0236	Diode HZM7C-TR	1
3131	HDH0224	Diode HSM88S	1
3132	HDH0224	Diode HSM88S	1
3133	HDH0224	Diode HSM88S	1
3134	HDH0224	Diode HSM88S	1
3135	HDS0496	Diode 1SS123	1
3136	HDH0224	Diode HSM88S	1
3137	HDS0496	Diode 1SS123	1
3138	HDS0538	Diode 1SS153	1
3139	HDH0230	Diode ZENNER HZM5B	1
3140	HDS0538	Diode 1SS153	1
3141	HDH0235	Diode HZM4B-TR	1
1	IDH0670	IC,Digital HD74LS38P	1

SYMBOL	PART CODE	DESCRIPTION	Q'TY
P8000	JBS0068	Connector S10B-XH-A	1
P8001	JBS0068	Connector S10B-XH-A	1
P8002	JBS0068	Connector S10B-XH-A	1
P8003	JBS0068	Connector S10B-XH-A	1
P8004	JBS0068	Connector S10B-XH-A	1
P8005	JBS0068	Connector S10B-XH-A	1
P8041	JBS0050	Connector SLEM15R-2	1
P8060	JBB0021	Connector B3B-XH-A	1
P8061	JBS0032	Connector S2B-XH-A	1
P8063	JBS0070	Connector S5B-XH-A	1
P8130	JBB0021	Connector B3B-XH-A	1
P8131	JBS0032	Connector S2B-XH-A	1
P8133	JBS0070	Connector S5B-XH-A	1
R8000	RME1446	R,Metal 0.1W 4.7kΩ ±5%	1
R8001	RME1446	R,Metal 0.1W 4.7kΩ ±5%	1
R8002	RME1446	R,Metal 0.1W 4.7kΩ ±5%	1
R8008	RME1450	R,Metal 0.1W 10kΩ ±5%	1
R8011	RME1432	R,Metal 0.1W 330Ω ±5%	1
R8012	RME1432	R,Metal 0.1W 330Ω ±5%	1
R8013	RME1432	R,Metal 0.1W 330Ω ±5%	1
R8014	RME1432	R,Metal 0.1W 330Ω ±5%	1
R8015	RMW1432	R,Metal 0.1W 330Ω ±5%	1
R8016	RME1432	R,Metal 0.1W 330Ω ±5%	1
R8017	RME1432	R,Metal 0.1W 330Ω ±5%	1
R8018	RME1432	R,Metal 0.1W 330Ω ±5%	1
R8021	RME1432	R,Metal 0.1W 330Ω ±5%	1
R8022	RME1432	R,Metal 0.1W 330Ω ±5%	1
R8023	RME1432	R,Metal 0.1W 330Ω ±5%	1
R8024	RME1432	R,Metal 0.1W 330Ω ±5%	1
R8025	RME1432	R,Metal 0.1W 330Ω ±5%	1
R8026	RME1432	R,Metal 0.1W 330Ω ±5%	1
R8027	RME1432	R,Metal 0.1W 330Ω ±5%	1
R8028	RME1432	R,Metal 0.1W 330Ω ±5%	1
R8030	RME1454	R,Metal 0.1W 22kΩ ±5%	1
R8031	RME1442	R,Metal 0.1W 2.2kΩ ±5%	1
R8032	RME1419	R,Metal 0.1W 27Ω ±5%	1
R8034	RME1454	R,Metal 0.1W 22kΩ ±5%	1
R8035	RME1442	R,Metal 0.1W 2.2kΩ ±5%	1
R8036	RME1419	R,Metal 0.1W 27Ω ±5%	1
R8060	RME1428	R,Metal 0.1W 150Ω ±5%	1
R8061	RME1420	R,Metal 0.1W 33Ω ±5%	1
R8062	RME1416	R,Metal 0.1W 15Ω ±5%	1
R8063	RME1427	R,Metal 0.1W 120Ω ±5%	1
R8064	RME1430	R,Metal 0.1W 220Ω ±5%	1
R8065	RME1440	R,Metal 0.1W 1.5kΩ ±5%	1
R8066	RME1424	R,Metal 0.1W 68Ω ±5%	1
R8067	RME1469	R,Metal 1/10W 4.7Ω ±10%	1
R8070	RME1426	R,Metal 0.1W 100Ω ±5%	1
R8072	RME1431	R,Metal 0.1W 270Ω ±5%	1
R8073	RME1415	R,Metal 0.1W 12Ω ±5%	1
R8075	RME1422	R,Metal 0.1W 47Ω ±5%	1
R8076	RME1431	R,Metal 0.1W 270Ω ±5%	1
R8078	RME1420	R,Metal 0.1W 33Ω ±5%	1
R8079	RME1420	R,Metal 0.1W 33Ω ±5%	1
R8088	RME1420	R,Metal 0.1W 33Ω ±5%	1
R8089	RME1414	R,Metal 0.1W 10Ω ±5%	1
R8090	RME1445	R,Metal 0.1W 3.9kΩ ±5%	1
R8080	RME1413	R,Metal 0Ω	1
R8091	RME1413	R,Metal 0Ω	1
R8092	RME1442	R,Metal 0.1W 2.2kΩ ±5%	1
R8093	RME1426	R,Metal 0.1W 100Ω ±5%	1

SYMBOL	PART CODE	DESCRIPTION				Q'TY
R8094	RME1434	R,Metal	0.1W	470Ω	±5%	1
R8096	RME1426	R,Metal	0.1W	100Ω	±5%	1
R8097	RME1438	R,Metal	0.1W	1.0kΩ	±5%	1
R8098	RME1418	R,Metal	0.1W	22Ω	±5%	1
R8099	RME1442	R,Metal	0.1W	2.2kΩ	±5%	1
R8100	RME1430	R,Metal	0.1W	220Ω	±5%	1
R8101	RME1427	R,Metal	0.1W	120Ω	±5%	1
R8102	RME1442	R,Metal	0.1W	2.2kΩ	±5%	1
R8103	RME1418	R,Metal	0.1W	22Ω	±5%	1
R8104	RME1438	R,Metal	0.1W	1.0kΩ	±5%	1
R8105	RME1426	R,Metal	0.1W	100Ω	±5%	1
R8106	RME1426	R,Metal	0.1W	100Ω	±5%	1
R8107	RME1426	R,Metal	0.1W	100Ω	±5%	1
R8108	RME1426	R,Metal	0.1W	100Ω	±5%	1
R8110	RME1427	R,Metal	0.1W	120Ω	±5%	1
R8111	RME1437	R,Metal	0.1W	820Ω	±5%	1
R8112	RME1438	R,Metal	0.1W	1.0kΩ	±5%	1
R8113	RME1438	R,Metal	0.1W	1.0kΩ	±5%	1
R8114	RME1414	R,Metal	0.1W	10Ω	±5%	1
R8115	RME1432	R,Metal	0.1W	330Ω	±5%	1
R8116	RME1446	R,Metal	0.1W	4.7kΩ	±5%	1
R8117	RME1430	R,Metal	0.1W	220Ω	±5%	1
R8118	RME1416	R,Metal	0.1W	15Ω	±5%	1
R8119	RME1429	R,Metal	0.1W	180Ω	±5%	1
R8120	RME1434	R,Metal	0.1W	470Ω	±5%	1
R8121	RME1426	R,Metal	0.1W	100Ω	±5%	1
R8122	RME1426	R,Metal	0.1W	100Ω	±5%	1
R8123	RME1434	R,Metal	0.1W	470Ω	±5%	1
R8130	RME1428	R,Metal	0.1W	150Ω	±5%	1
R8131	RME1420	R,Metal	0.1W	33Ω	±5%	1
R8132	RME1416	R,Metal	0.1W	15Ω	±5%	1
R8133	RME1427	R,Metal	0.1W	120Ω	±5%	1
R8134	RME1430	R,Metal	0.1W	220Ω	±5%	1
R8135	RME1440	R,Metal	0.1W	1.5kΩ	±5%	1
R8136	RME1424	R,Metal	0.1W	68Ω	±5%	1
R8137	RME1469	R,Metal	1/10W	4.7Ω	±10%	1
R8138	RME1440	R,Metal	0.1W	1.5kΩ	±5%	1
R8139	RME1440	R,Metal	0.1W	1.5kΩ	±5%	1
R8140	RME1426	R,Metal	0.1W	100Ω	±5%	1
R8141	RME1432	R,Metal	0.1W	330Ω	±5%	1
R8142	RME1431	R,Metal	0.1W	270Ω	±5%	1
R8143	RME1415	R,Metal	0.1W	12Ω	±5%	1
R8145	RME1422	R,Metal	0.1W	47Ω	±5%	1
R8146	RME1431	R,Metal	0.1W	270Ω	±5%	1
R8147	RME1432	R,Metal	0.1W	330Ω	±5%	1
R8148	RME1420	R,Metal	0.1W	33Ω	±5%	1
R8149	RME1420	R,Metal	0.1W	33Ω	±5%	1
R8150	RME1413	R,Metal		0Ω		1
R8151	RME1435	R,Metal	0.1W	560Ω	±5%	1
R8153	RME1433	R,Metal	0.1W	390Ω	±5%	1
R8154	RME1433	R,Metal	0.1W	390Ω	±5%	1
R8155	RME1435	R,Metal	0.1W	560Ω	±5%	1
R8156	RME1450	R,Metal	0.1W	10kΩ	±5%	1
R8157	RME1450	R,Metal	0.1W	10kΩ	±5%	1
R8158	RME1420	R,Metal	0.1W	33Ω	±5%	1
R8159	RME1414	R,Metal	0.1W	10Ω	±5%	1
R8160	RME1445	R,Metal	0.1W	3.9kΩ	±5%	1
R8161	RME1413	R,Metal		0Ω		1
R8162	RME1442	R,Metal	0.1W	2.2kΩ	±5%	1
R8163	RME1426	R,Metal	0.1W	100Ω	±5%	1
R8164	RME1434	R,Metal	0.1W	470Ω	±5%	1
R8165	RME1426	R,Metal	0.1W	100Ω	±5%	1
R8167	RME1438	R,Metal	0.1W	1.0kΩ	±5%	1

SYMBOL	PART CODE	DESCRIPTION				Q'TY
R8168	RME1418	R,Metal	0.1W	22Ω	±5%	1
R8169	RME1442	R,Metal	0.1W	2.2kΩ	±5%	1
R8170	RME1430	R,Metal	0.1W	220Ω	±5%	1
R8171	RME1427	R,Metal	0.1W	120Ω	±5%	1
R8172	RME1442	R,Metal	0.1W	2.2kΩ	±5%	1
R8173	RME1418	R,Metal	0.1W	22Ω	±5%	1
R8174	RME1438	R,Metal	0.1W	1.0kΩ	±5%	1
R8175	RME1426	R,Metal	0.1W	100Ω	±5%	1
R8176	RME1426	R,Metal	0.1W	100Ω	±5%	1
R8177	RME1426	R,Metal	0.1W	100Ω	±5%	1
R8071	RME1432	R,Metal	0.1W	330Ω	±5%	1
R8072	RME1432	R,Metal	0.1W	330Ω	±5%	1
R8073	RME1432	R,Metal	0.1W	330Ω	±5%	1
R8074	RME1432	R,Metal	0.1W	330Ω	±5%	1
R8075	RME1432	R,Metal	0.1W	330Ω	±5%	1
R8076	RME1432	R,Metal	0.1W	330Ω	±5%	1
R8077	RME1432	R,Metal	0.1W	330Ω	±5%	1
R8178	RME1426	R,Metal	0.1W	100Ω	±5%	1
R8180	RME1427	R,Metal	0.1W	120Ω	±5%	1
R8181	RME1437	R,Metal	0.1W	820Ω	±5%	1
R8182	RME1438	R,Metal	0.1W	1.0kΩ	±5%	1
R8183	RME1438	R,Metal	0.1W	1.0kΩ	±5%	1
R8184	RME1414	R,Metal	0.1W	10Ω	±5%	1
R8185	RME1432	R,Metal	0.1W	330Ω	±5%	1
R8186	RME1446	R,Metal	0.1W	4.7kΩ	±5%	1
R8187	RME1430	R,Metal	0.1W	220Ω	±5%	1
R8188	RME1416	R,Metal	0.1W	15Ω	±5%	1
R8189	RME1429	R,Metal	0.1W	180Ω	±5%	1
R8190	RME1426	R,Metal	0.1W	100Ω	±5%	1
R8191	RME1426	R,Metal	0.1W	100Ω	±5%	1
R8082	RME1435	R,Metal	0.1W	560Ω	±5%	1
R8085	RME1435	R,Metal	0.1W	560Ω	±5%	1
R8083	RME1433	R,Metal	0.1W	390Ω	±5%	1
R8084	RME1433	R,Metal	0.1W	390Ω	±5%	1
R8006	RME1446	R,Metal	0.1W	4.7kΩ	±5%	1
R8007	RME1446	R,Metal	0.1W	4.7kΩ	±5%	1
R8086	RME1450	R,Metal	0.1W	10kΩ	±5%	1
R8087	RME1450	R,Metal	0.1W	10kΩ	±5%	1
R8068	RME1440	R,Metal	0.1W	1.5kΩ	±5%	1
R8069	RME1440	R,Metal	0.1W	1.5kΩ	±5%	1
RM8001	RZA0148	R,Block	EXB-F9E-561J			1
RM8003	RZA0148	R,Block	EXB-F9E-561J			1
RV8060	RNE0050	VR,Metal	EVN 39C00YB52(500Ω)			1
RV8061	RNE0050	VR,Metal	EVN 39C00YB52(500Ω)			1
TR8060	HTC0848	Transistor	2SC2759-U23			1
TR8061	HTC0848	Transistor	2SC2759-U23			1
TR8062	HTC0848	Transistor	2SC2759-U23			1
TR8063	HTK0127	Transistor	2SK508 K52			1
TR8064	HTK0127	Transistor	2SK508 K52			1
TR8065	HTC0848	Transistor	2SC2759-U23			1
TR8066	HTA0318	Transistor	2SA1462Y34			1
TR8067	HTC0848	Transistor	2SC2759-U23			1
TR8068	HTC0848	Transistor	2SC2759-U23			1
TR8069	HTC0848	Transistor	2SC2759-U23			1
TR8070	HTC0848	Transistor	2SC2759-U23			1
TR8075	HTC0686	Transistor	2SC2462C			1
TR8076	HTC0686	Transistor	2SC2462C			1
TR8130	HTC0848	Transistor	2SC2759-U23			1
TR8131	HTC0848	Transistor	2SC2759-U23			1

MBOL	PART CODE	DESCRIPTION	Q'TY
3132	HTC0848	Transistor 2SC2759-U23	1
3133	HTK0127	Transistor 2SK508 K52	1
3134	HTK0127	Transistor 2SK508 K52	1
3135	HTC0848	Transistor 2SC2759-U23	1
3136	HTA0318	Transistor 2SA1462Y34	1
3137	HTC0848	Transistor 2SC2759-U23	1
3138	HTC0848	Transistor 2SC2759-U23	1
3139	HTC0848	Transistor 2SC2759-U23	1
3140	HTC0848	Transistor 2SC2759-U23	1

D & ACQ MEMORY PEF-825

MBOL	PART CODE	DESCRIPTION	Q'TY
11 76	CCC1030	C,Ceramic 50V 10000pF +80% -20%	66
60 99	CCC1030	C,Ceramic 50V 10000pF +80% -20%	40
201	CCC1030	C,Ceramic 50V 10000pF +80% -20%	1
202	CEK0088	C,Al Elyc 50V 10μF ±20%	1
203	CCG0116	C,Ceramic 50V 2pF±0.25pF	
204	CCC1030	C,Ceramic 50V 10000pF +80% -20%	1
205	CEK0085	C,Al Elyc 50V 1.0pF ±20%	1
206	CCC1030	C,Ceramic 50V 10000pF +80% -20%	1
207	CEK0085	C,Al Elyc 50V 1.0μF ±20%	1
208	CCR0090	C,Ceramic 50V 0.1μF +80% -20%	1
209	CCC1030	C,Ceramic 50V 10000pF +80% -20%	1
210	CCC1030	C,Ceramic 50V 10000pF +80% -20%	1
211	CCC1030	C,Ceramic 50V 10000pF +80% -20%	1
212	CCC1030	C,Ceramic 50V 10000pF +80% -20%	1
214	CCG0211	C,Ceramic 50V 10000pF ±10%	1
215	CCG0211	C,Ceramic 50V 10000pF ±10%	1
216	CEK0078	C,Al Elyc 16V 47μF ±20%	1
217	CCG0211	C,Ceramic 50V 10000pF ±10%	1
218	CCG0124	C,Ceramic 50V 10pF ±0.5pF	1
219	CCC1030	C,Ceramic 50v 10000pF +80% -20%	1
220	CCC1030	C,Ceramic 50V 10000pF +80% -20%	1
221	CCC1030	C,Ceramic 50V 10000pF +80% -20%	1
222	CEK0088	C,Al Elyc 50V 10μF ±20%	1
223	CCG0116	C,Ceramic 50V 2pF±0.25pF	1

SYMBOL	PART CODE	DESCRIPTION	Q'TY
C5224	CCC1030	C,Ceramic 50V 10000pF +80% -20%	1
C5225	CEK0085	C,Al Elyc 50V 1.0μF ±20%	1
C5226	CCC1030	C,Ceramic 50V 10000pF +80% -20%	1
C5227	CEK0085	C,Al Elyc 50V 1.0μF ±20%	1
C5228	CCR0090	C,Ceramic 50V 0.1μF +80% -20%	1
C5229	CCC1030	C,Ceramic 50V 10000pF +80% -20%	1
C5230	CCC1030	C,Ceramic 50V 10000pF +80% -20%	1
C5231	CCC1030	C,Ceramic 50V 10000pF +80% -20%	1
C5232	CCC1030	C,Ceramic 50V 10000pF +80% -20%	1
C5234	CCG0211	C,Ceramic 50V 10000pF ±10%	1
C5235	CCG0211	C,Ceramic 50V 10000pF ±10%	1
C5236	CEK0078	C,Al Elyc 16V 47μF ±20%	1
C5237	CCG0211	C,Ceramic 50V 10000pF ±10%	1
C5238	CCG0124	C,Ceramic 50V 10pF ±0.5pF	1
C5239	CCG0190	C,Ceramic 50V 220pF ±5% SL	1
C5240	CCG0190	C,Ceramic 50V 220pF ±5% SL	1
C5241	CCC1030	C,Ceramic 50V 10000pF +80% -20%	1
C5242	CCG0211	C,Ceramic 50V 10000pF ±10%	1
C5243	CEK0085	C,Al Elyc 50V 1.0μF ±20%	1
C5244	CCC1030	C,Ceramic 50V 10000pF +80% -20%	1
C5245	CEK0078	C,Al Elyc 16V 47μF ±20%	1
C5246	CCC1030	C,Ceramic 50V 10000pF +80% -20%	1
C5247	CEK0078	C,Al Elyc 16V 47μF ±20%	1
C5248	CCG0211	C,Ceramic 50V 10000pF ±10%	1
C5249	CCG0211	C,Ceramic 50V 10000pF ±10%	1
C5251	CCC1027	C,Ceramic 50V 220pF ±10%	1
C5252	CCC1027	C,Ceramic 50V 220pF ±10%	1
C5253	CCC1027	C,Ceramic 50V 220pF ±10%	1
C5254	CCC1027	C,Ceramic 50V 220pF ±10%	1
C5255	CCC1027	C,Ceramic 50V 220pF ±10%	1
C5256	CCC1027	C,Ceramic 50V 220pF ±10%	1
C5257	CCC1027	C,Ceramic 50V 220pF ±10%	1
C5258	CCC1027	C,Ceramic 50V 220pF ±10%	1
C5259	CCC1027	C,Ceramic 50V 220pF ±10%	1
C5260	CCC1027	C,Ceramic 50V 220pF ±10%	1
C5261	CCC1027	C,Ceramic 50V 220pF ±10%	1
C5262	CCC1027	C,Ceramic 50V 220pF ±10%	1
C5263	CCC1027	C,Ceramic 50V 220pF ±10%	1
C5264	CCC1027	C,Ceramic 50V 220pF ±10%	1
C5265	CCC1027	C,Ceramic 50V 220pF ±10%	1
C5266	CCC1027	C,Ceramic 50V 220pF ±10%	1
C5271	CCC1027	C,Ceramic 50V 220pF ±10%	1
C5272	CCC1027	C,Ceramic 50V 220pF ±10%	1
C5273	CCC1027	C,Ceramic 50V 220pF ±10%	1
C5274	CCC1027	C,Ceramic 50V 220pF ±10%	1
C5275	CCC1027	C,Ceramic 50V 220pF ±10%	1
C5276	CCC1027	C,Ceramic 50V 220pF ±10%	1
C5277	CCC1027	C,Ceramic 50V 220pF ±10%	1
C5278	CCC1027	C,Ceramic 50V 220pF ±10%	1
C5279	CCC1027	C,Ceramic 50V 220pF ±10%	1
C5280	CCC1027	C,Ceramic 50V 220pF ±10%	1
C5281	CCC1027	C,Ceramic 50V 220pF ±10%	1
C5282	CCC1027	C,Ceramic 50V 220pF ±10%	1

SYMBOL	PART CODE	DESCRIPTION	Q'TY
C5283	CCC1027	C,Ceramic 50V 220pF ±10%	1
C5284	CCC1027	C,Ceramic 50V 220pF ±10%	1
C5285	CCC1027	C,Ceramic 50V 220pF ±10%	1
C5286	CCC1027	C,Ceramic 50V 220pF ±10%	1
C5300	CCG0211	C,Ceramic 50V 10000pF ±10%	1
C5301	CCG0211	C,Ceramic 50V 10000pF ±10%	1
C5302	CEK0078	C,Al Elyc 16V 47μF ±20%	1
C5320	CCG0211	C,Ceramic 50V 10000pF ±10%	1
C5321	CCG0211	C,Ceramic 50V 10000pF ±10%	1
C5322	CEK0078	C,Al Elyc 16V 47μF ±20%	1
C5341	CCC1030	C,Ceramic 50V 10000pF +80% -20%	1
C5342	CEK0078	C,Al Elyc 16V 47μF ±20%	1
C5343	CCC1030	C,Ceramic 50V 10000pF +80% -20%	1
C5344	CEK0078	C,Al Elyc 16V 47μF ±20%	1
C5350	CEK0078	C,Al Elyc 16V 47μF ±20%	1
C5351	CCC1030	C,Ceramic 50V 10000pF +80% -20%	1
C5352	CEK0078	C,Al Elyc 16V 47μF ±20%	1
C5353	CCR0090	C,Ceramic 50V 0.1μF +80% -20%	1
C5354	CCC1034	C,Ceramic 50V 68pF ±5%	1
C5355	CEK0078	C,Al Elyc 16V 47μF ±20%	1
C5356	CEK0078	C,Al Elyc 16V 47μF ±20%	1
C5357	CCC1029	C,Ceramic 50V 1000pF +80% -20%	1
C5358	CCC1029	C,Ceramic 50V 1000pF +80% -20%	1
C5421A	CCC1005	C,Ceramic 50V 18pF ±5%	1
C5422A	CCC1005	C,Ceramic 50V 18pF ±5%	1
C5423A	CCC1003	C,Ceramic 50V 12pF ±5%	1
C5424A	CCC1005	C,Ceramic 50V 18pF ±5%	1
C5425A	CCC1005	C,Ceramic 50V 18pF ±5%	1
C5426A	CCC1003	C,Ceramic 50V 12pF ±5%	1
C5490	CCR0128	C,Ceramic 50V 0.1μF +80% -20%	1
C5491	CEK0078	C,Al Elyc 16V 47μF ±20%	1
C5492	CEK0078	C,Al Elyc 16V 47μF ±20%	1
C5493	CEK0078	C,Al Elyc 16V 47μF ±20%	1
C5494	CEK0078	C,Al Elyc 16V 47μF ±20%	1
C5496	CEK0078	C,Al Elyc 16V 47μF ±20%	1
C5497	CEK0078	C,Al Elyc 16V 47μF ±20%	1
C5498	CEK0078	C,Al Elyc 16V 47μF ±20%	1
CL5491	AFD0010	Fil DST310-55D223S	1
CL5492	AFD0010	Fil DST310-55D223S	1
CL5493	AFD0010	Fil DST310-55D223S	1
CL5494	AFD0010	Fil DST310-55D223S	1
CL5496	AFD0010	Fil DST310-55D223S	1
CL5497	AFD0010	Fil DST310-55D223S	1
CV5203	CVT0053	C,Variable TZ03Z2R3NR169(2.3P)	1
CV5204	CVT0053	C,Variable TZ03Z2R3NR169(2.3P)	1
CV5340	CVT0060	C,Variable TZ03P600NR169(60P)	1
D5200	HDS0437	Diode 1SS133	1
D5201	HDH0040	Diode ZENNER HZ7(B)	1
D5202	HDS0415	Diode 1SS88	1
D5220	HDS0437	Diode 1SS133	1
D5221	HDS0040	Diode ZENNER HZ7(B)	1
D5222	HDS0415	Diode 1SS88	1
D5240	HDH0033	Diode HZ6B (ZENNER)	1

SYMBOL	PART CODE	DESCRIPTION	Q'TY
D5251	HDH0246	Diode HZS5.1EB2	1
D5252	HDH0246	Diode HZS5.1EB2	1
D5253	HDH0246	Diode HZS5.1EB2	1
D5254	HDH0246	Diode HZS5.1EB2	1
D5255	HDH0246	Diode HZS5.1EB2	1
D5256	HDH0246	Diode HZS5.1EB2	1
D5257	HDH0246	Diode HZS5.1EB2	1
D5258	HDH0246	Diode HZS5.1EB2	1
D5259	HDH0246	Diode HZS5.1EB2	1
D5260	HDH0246	Diode HZS5.1EB2	1
D5261	HDH0246	Diode HZS5.1EB2	1
D5262	HDH0246	Diode HZS5.1EB2	1
D5263	HDH0246	Diode HZS5.1EB2	1
D5264	HDH0246	Diode HZS5.1EB2	1
D5265	HDH0246	Diode HZS5.1EB2	1
D5266	HDH0246	Diode HZS5.1EB2	1
D5271	HDH0246	Diode HZS5.1EB2	1
D5272	HDH0246	Diode HZS5.1EB2	1
D5273	HDH0246	Diode HZS5.1EB2	1
D5274	HDH0246	Diode HZS5.1EB2	1
D5275	HDH0246	Diode HZS5.1EB2	1
D5276	HDH0246	Diode HZS5.1EB2	1
D5277	HDH0246	Diode HZS5.1EB2	1
D5278	HDH0246	Diode HZS5.1EB2	1
D5279	HDH0246	Diode HZS5.1EB2	1
D5280	HDH0246	Diode HZS5.1EB2	1
D5281	HDH0246	Diode HZS5.1EB2	1
D5282	HDH0246	Diode HZS5.1EB2	1
D5283	HDH0246	Diode HZS5.1EB2	1
D5284	HDH0246	Diode HZS5.1EB2	1
D5285	HDH0246	Diode HZS5.1EB2	1
D5286	HDH0246	Diode HZS5.1EB2	1
D5470	HDX0055	Diode 1SS165	1
D5471	HDX0055	Diode 1SS165	1
D5472	HDX0055	Diode 1SS165	1
D5473	HDX0055	Diode 1SS165	1
D5474	HDX0055	Diode 1SS165	1
D5475	HDX0055	Diode 1SS165	1
D5476	HDX0055	Diode 1SS165	1
D5477	HDX0055	Diode 1SS165	1
D5478	HDX0055	Diode 1SS165	1
D5479	HDX0055	Diode 1SS165	1
D5480	HDX0055	Diode 1SS165	1
D5481	HDX0055	Diode 1SS165	1
D5482	HDX0055	Diode 1SS165	1
D5483	HDX0055	Diode 1SS165	1
D5484	HDX0055	Diode 1SS165	1
D5485	HDX0055	Diode 1SS165	1
D5491	ILT0091	IC,Analog TL431CLP-B	1
DL5301	EDH0002	Delay Line HS-250	1
DL5302	EDA0003	Delay Line AT-02	1
DL5303	EDA0002	Delay Line AT-01	1
1F	IDS0445	IC,Digital SN74AS374N	1
1G	IDS0445	IC,Digital SN74AS374N	1
1H	IDC0144	IC,Digital CXK5814P-35L	1
1I	IDH1009	IC,Digital HD74HC244P(TC74HC244P)	1
1J	IDH1187	IC,Digital HD74HC139P	1
2F	IDS0445	IC,Digital SN74AS374N	1
2G	IDS0445	IC,Digital SN74AS374N	1
2H	IDC0144	IC,Digital CXK5814P-35L	1
2I	IDH1009	IC,Digital HD74HC244P(TC74HC244P)	1

BOL	PART CODE	DESCRIPTION		Q'TY
	IDH1009	IC,Digital	HD74HC244P(TC74HC244P)	1
	IDM0581	IC,Digital	MC10H101L	1
	IDM0705	IC,Digital	MC10H350L	1
	IDS0445	IC,Digital	SN74AS374N	1
	IDS0445	IC,Digital	SN74AS374N	1
	IDC0144	IC,Digital	CXK5814P-35L	1
	IDH1009	IC,Digital	HD74HC244P(TC74HC244P)	1
	IDH1009	IC,Digital	HD74HC244P(TC74HC244P)	1
	IZC0003	IC,Hybrid	CX20116	1
	IDM0581	IC,Digital	MC10H101L	1
	IDM0705	IC,Digital	MC10H350L	1
	IDS0445	IC,Digital	SN74AS374N	1
	IDC0144	IC,Digital	CXK5814P-35L	1
	IDH1009	IC,Digital	HD74HC244P(TC74HC244P)	1
	IDS0453	IC,Digital	SN74AS157N	1
	IDM0575	IC,Digital	MC10H116L	1
	IDS0445	IC,Digital	SN74AS374N	1
	IDS0445	IC,Digital	SN74AS374N	1
	IDC0144	IC,Digital	CXK5814P-35L	1
	IDH1009	IC,Digital	HD74HC244P(TC74HC2244P)	1
	IDS0453	IC,Digital	SN74AS157N	1
	IDM0572	IC,Digital	MC10H102L	1
	IDM0575	IC,Digital	MC10H116L	1
	IDS0445	IC,Digital	SN74AS374N	1
	IDS0445	IC,Digital	SN74AS374N	1
	IDC0144	IC,Digital	CXK5814P-35L	1
	IDH1009	IC,Digital	HD74HC244P(TC74HC244P)	1
	IDS0453	IC,Digital	SN74AS157N	1
	IDM0581	IC,Digital	MC10H101L	1
	IDM0705	IC,Digital	MC10H350L	1
	IDS0445	IC,Digital	SN74AS374N	1
	IDS0445	IC,Digital	SN74AS374N	1
	IDC0144	IC,Digital	CXK5814P-35L	1
	IDH1009	IC,Digital	HD74HC244P(TC74HC244P)	1
	IDH0617	IC,Digital	HD74LS161P	1
	IZC0003	IC,Hybrid	CX20116	1
	IDM0581	IC,Digital	MC10H101L	1
	IDM0705	IC,Digital	MC10H350L	1
	IDM0583	IC,Digital	MC10H125L	1
	IDS0445	IC,Digital	SN74AS374N	1
	IDC0144	IC,Digital	CXK5814P-35L	1
	IDH1009	IC,Digital	HD74HC244P(TC74HC244P)	1
	IDH0617	IC,Digital	HD74LS161P	1
	IDM0646	IC,Digital	MC10H141L	1
	IDS0446	IC,Digital	SN74AS08N	1
	IDS0444	IC,Digital	SN74AS00N	1
	IDH0985	IC,Digital	HD74HC273P(TC74HC273P)	1
	IDH0617	IC,Digital	HD74LS161P	1
B	ILT0037	IC,Analog	TL081CP	1
F	EDZ0026	Delay Line	ZD10-5	1
G	IDM0584	IC,Digital	MC10H136L	1
H	IDH1017	IC,Digital	HD74HC02P	1
I	IDH0985	IC,Digital	HD74HC273P(TC74HC273P)	1
A	IZH0018	IC,Hybrid	HA17012PB	1
B	ILT0114	IC,Analog	TL710C-P	1
D	IDM0588	IC,Digital	MC10H174L	1
E	IDM0592	IC,Digital	MC10H210L	1
F	IDH0008	IC,Digital	HD10131	1
G	IDH0006	IC,Digital	HD10124	1
H	IDH1000	IC,Digital	HD74HC08P(TC74HC08P)	1
I	IDH0985	IC,Digital	HD74HC273P(TC74HC273P)	1
A	IDH1058	IC,Digital	HD74HC4040P	1
B	IDS0443	IC,Digital	SN74AS04N	1

SYMBOL	PART CODE	DESCRIPTION		Q'TY
12C	IDM0582	IC,Digital	MC10H124L	1
12D	AAC0026	Xtal	NTO-763B 100MHZ	1
12E	AAC0027	Xtal	NTO-763B 80MHZ	1
12F	IDM0577	IC,Digital	MC10H131L	1
12G	IDH0007	IC,Digital	HD10125	1
12H	IDH0982	IC,Digital	HD74HC00P(TC74HC00P)	1
12I	IDH0985	IC,Digital	HD74HC273P(TC74HC273P)	1
13A	IDS0455	IC,Digital	SN74AS74N	1
13B	IDS0444	IC,Digital	SN74AS00N	1
13C	IDS0452	IC,Digital	SN74AS153N	1
13D	IDX0097	IC,Digital	8650-0	1
13E	IDS0394	IC,Digital	SN74S196N	1
13F	IDS0452	IC,Digital	SN74AS153N	1
13G	IDS0394	IC,Digital	SN74S196N	1
13H	IDH0617	IC,Digital	HD74LS161P	1
13I	IDH0985	IC,Digital	HD74HC273P(TC74HC273P)	1
14A	IDM0575	IC,Digital	MC10H116L	1
14B	IDS0455	IC,Digital	SN74AS74N	1
14C	IDS0455	IC,Digital	SN74AS74N	1
14D	IDS0446	IC,Digital	SN74AS08N	1
14E	IDS0480	IC,Digital	SN74AS161N	1
14F	IDS0480	IC,Digital	SN74AS161N	1
14G	IDS0480	IC,Digital	SN74AS161N	1
14H	IDH1051	IC,Digital	HD74HC74P	1
14I	IDH1051	IC,Digital	HD74HC74P	1
IC5200	ILH0177	IC,Analog	HA1-2540-4	1
IC5201	ILH0177	IC,Analog	HA1-2540-4	1
IC5203	ILM0438	IC,Analog	μPC811C	1
K5200	SRR0053	Relay	NR-HD-12V (AE5343)	1
K5201	SRR0053	Relay	NR-HD-12V (AE5343)	1
L5201	TLE0120	Inductor	ELE-Y 6R8 KA(6.8μH)	1
L5221	TLE0120	Inductor	ELE-Y 6R8 KA(6.8μH)	1
L5400	TLE0058	Coil	ELO606SK 10μH ±10%	1
P5200	JBS0025	Connector	S15B-XH-A	1
P5201	JBS0032	Connector	S2B-XH-A	1
P5202	JBS0032	Connector	S2B-XH-A	1
P5203	JBS0068	Connector	S10B-XH-A	1
P5303	JBS0054	Connector	SLEM23R-2	1
P5304	JBS0055	Connector	SLEM30R-2	1
P5321	JBS0068	Connector	S10B-XH-A	1
P5322	JBB0026	Connector	B10B-XH-A	1
P5400	JBS0023	Connector	S6B-XH-A	1
R5201	RCE0769	R,Carbon	1/4W 1.0kΩ ±5%	1
R5202	RME1125	R,Metal	1/4W 5.11kΩ ±1%	1
R5203	RME0879	R,Metal	1/8W 1.8kΩ ±5%	1
R5204	RME0852	R,Metal	1/8W 10Ω ±5%	1
R5205	RME0911	R,Metal	1/8W 620Ω ±5%	1
R5206	RCE0762	R,Carbon	1/4W 270Ω ±5%	1
R5207	RCE0743	R,Carbon	1/4W 4.7Ω ±5%	1
R5208	RCE0763	R,Carbon	1/4W 330Ω ±5%	1
R5209	RME1125	R,Metal	1/4W 5.11kΩ ±1%	1
R5210	RME1069	R,Metal	1/4W 562Ω ±1%	1
R5211	RME1125	R,Metal	1/4W 5.11kΩ ±1%	1
R5212	RME1069	R,Metal	1/4W 562Ω ±1%	1
R5213	RME0856	R,Metal	1/8W 22Ω ±5%	1
R5214	RME0856	R,Metal	1/8W 22Ω ±5%	1
R5215	RCE0785	R,Carbon	1/4W 22kΩ ±5%	1
R5216	RCE0781	R,Carbon	1/4W 10kΩ ±5%	1

SYMBOL	PART CODE	DESCRIPTION				Q'TY
R5217	RCE0757	R,Carbon	1/4W	100Ω	±5%	1
R5218	RCE0757	R,Carbon	1/4W	100Ω	±5%	1
R5221	RCE0769	R,Carbon	1/4W	1.0kΩ	±5%	1
R5222	RME1125	R,Metal	1/4W	5.11kΩ	±1%	1
R5223	RME0879	R,Metal	1/8W	1.8kΩ	±5%	1
R5224	RME0852	R,Metal	1/8W	10Ω	±5%	1
R5225	RME0911	R,Metal	1/8W	620Ω	±5%	1
R5226	RCE0762	R,Carbon	1/4W	270Ω	±5%	1
R5227	RCE0743	R,Carbon	1/4W	4.7Ω	±5%	1
R5228	RCE0763	R,Carbon	1/4W	330Ω	±5%	1
R5229	RME1125	R,Metal	1/4W	5.11kΩ	±1%	1
R5230	RME1069	R,Metal	1/4W	562Ω	±1%	1
R5231	RME1125	R,Metal	1/4W	5.11kΩ	±1%	1
R5232	RME1069	R,Metal	1/4W	562Ω	±1%	1
R5233	RME0856	R,Metal	1/8W	22Ω	±5%	1
R5234	RME0856	R,Metal	1/8W	22Ω	±5%	1
R5235	RCE0785	R,Carbon	1/4W	22kΩ	±5%	1
R5236	RCE0781	R,Carbon	1/4W	10kΩ	±5%	1
R5237	RCE0757	R,Carbon	1/4W	100Ω	±5%	1
R5241	RME1074	R,Metal	1/4W	1.50kΩ	±1%	1
R5242	RME1243	R,Metal	1/4W	3.01kΩ	±1%	1
R5243	RCE0766	R,Carbon	1/4W	560Ω	±5%	1
R5244	RCE0769	R,Carbon	1/4W	1.0kΩ	±5%	1
R5245	RCE0757	R,Carbon	1/4W	100Ω	±5%	1
R5246	RCE0770	R,Carbon	1/4W	1.2kΩ	±5%	1
R5247	RCE0771	R,Carbon	1/4W	1.5kΩ	±5%	1
R5248	RCE0757	R,Carbon	1/4W	100Ω	±5%	1
R5249	RCE0770	R,Carbon	1/4W	1.2kΩ	±5%	1
R5250	RCE0771	R,Carbon	1/4W	1.5kΩ	±5%	1
R5252	RCE0757	R,Carbon	1/4W	100Ω	±5%	1
R5261	RCE0757	R,Carbon	1/4W	100Ω	±5%	1
R5262	RCE0757	R,Carbon	1/4W	100Ω	±5%	1
R5263	RCE0757	R,Carbon	1/4W	100Ω	±5%	1
R5264	RCE0757	R,Carbon	1/4W	100Ω	±5%	1
R5265	RCE0764	R,Carbon	1/4W	390Ω	±5%	1
R5266	RCE0764	R,Carbon	1/4W	390Ω	±5%	1
R5267	RCE0764	R,Carbon	1/4W	390Ω	±5%	1
R5268	RCE0764	R,Carbon	1/4W	390Ω	±5%	1
R5269	RCE0764	R,Carbon	1/4W	390Ω	±5%	1
R5270	RCE0764	R,Carbon	1/4W	390Ω	±5%	1
R5271	RCE0764	R,Carbon	1/4W	390Ω	±5%	1
R5272	RCE0764	R,Carbon	1/4W	390Ω	±5%	1
R5273	RCE0764	R,Carbon	1/4W	390Ω	±5%	1
R5274	RCE0764	R,Carbon	1/4W	390Ω	±5%	1
R5275	RCE0764	R,Carbon	1/4W	390Ω	±5%	1
R5276	RCE0764	R,Carbon	1/4W	390Ω	±5%	1
R5277	RCE0764	R,Carbon	1/4W	390Ω	±5%	1
R5278	RCE0764	R,Carbon	1/4W	390Ω	±5%	1
R5279	RCE0764	R,Carbon	1/4W	390Ω	±5%	1
R5280	RCE0764	R,Carbon	1/4W	390Ω	±5%	1
R5345	RCE0761	R,Carbon	1/4W	220Ω	±5%	1
R5346	RCE0758	R,Carbon	1/4W	120Ω	±5%	1
R5347	RCE1061	R,Metal	1/4W	121Ω	±1%	1
R5348	RCE0761	R,Carbon	1/4W	220Ω	±5%	1
R5349	RCE0761	R,Carbon	1/4W	220Ω	±5%	1
R5350	RME1060	R,Metal	1/4W	100Ω	±5%	1
R5351	RCE0757	R,Carbon	1/4W	100Ω	±5%	1
R5353	RCE0761	R,Carbon	1/4W	220Ω	±5%	1
R5355	RCE0757	R,Carbon	1/4W	100Ω	±5%	1
R5356	RCE0761	R,Carbon	1/4W	220Ω	±5%	1
R5357	RCE0757	R,Carbon	1/4W	100Ω	±5%	1
R5358	RCE0761	R,Carbon	1/4W	220Ω	±5%	1
R5359	RCE0757	R,Carbon	1/4W	100Ω	±5%	1

SYMBOL	PART CODE	DESCRIPTION				Q'TY
R5360	RCE0757	R,Carbon	1/4W	100Ω	±5%	1
R5363	RCE0757	R,Carbon	1/4W	100Ω	±5%	1
R5363	RCE0757	R,Carbon	1/4W	100Ω	±5%	1
R5367	RCE0761	R,Carbon	1/4W	220Ω	±5%	1
R5369	RCE0761	R,Carbon	1/4W	220Ω	±5%	1
R5371	RCE0761	R,Carbon	1/4W	220Ω	±5%	1
R5373	RCE0757	R,Carbon	1/4w	100Ω	±5%	1
R5375	RCE0757	R,Carbon	1/4W	100Ω	±5%	1
R5377	RCE0757	R,Carbon	1/4W	100Ω	±5%	1
R5379	RCE0757	R,Carbon	1/4W	100Ω	±5%	1
R5381	RCE0757	R,Carbon	1/4W	100Ω	±5%	1
R5383	RCE0761	R,Carbon	1/4W	220Ω	±5%	1
R5385	RCE0761	R,Carbon	1/4W	220Ω	±5%	1
R5387	RCE0761	R,Carbon	1/4W	220Ω	±5%	1
R5389	RCE0761	R,Carbon	1/4W	220Ω	±5%	1
R5391	RCE0761	R,Carbon	1/4W	220Ω	±5%	1
R5393	RCE0761	R,Carbon	1/4W	220Ω	±5%	1
R5395	RCE0757	R,Carbon	1/4W	100Ω	±5%	1
R5397	RCE0757	R,Carbon	1/4W	100Ω	±5%	1
R5399	RCE0761	R,Carbon	1/4W	220Ω	±5%	1
R5401	RCE0761	R,Carbon	1/4W	220Ω	±5%	1
R5405	RCE0749	R,Carbon	1/4W	22Ω	±5%	1
R5406	RCE0768	R,Carbon	1/4W	820Ω	±5%	1
R5407	RCE0752	R,Carbon	1/4W	39Ω	±5%	1
R5408	RCE0752	R,Carbon	1/4W	39Ω	±5%	1
R5409	RCE0757	R,Carbon	1/4W	100Ω	±5%	1
R5411	RCE0757	R,Carbon	1/4W	100Ω	±5%	1
R5413	RCE0757	R,Carbon	1/4W	100Ω	±5%	1
R5415	RCE0757	R,Carbon	1/4W	100Ω	±5%	1
R5417	RCE0753	R,Carbon	1/4W	47Ω	±5%	1
R5419	RCE0753	C,Carbon	1/4W	47Ω	±5%	1
R5421	RCE0757	C,Carbon	1/4W	100Ω	±5%	1
R5423	RCE0757	C,carbon	1/4W	100Ω	±5%	1
R5425	RCE0757	R,Carbon	1/4W	100Ω	±5%	1
R5427	RCE0757	R,Carbon	1/4W	100Ω	±5%	1
R5429	RCE0755	R,Carbon	1/4W	68Ω	±5%	1
R5431	RCE0755	R,Carbon	1/4W	68Ω	±5%	1
R5432	RCE0753	R,Carbon	1/4W	47Ω	±5%	1
R5433	RCE0753	R,Carbon	1/4W	47Ω	±5%	1
R5434	RCE0753	R,Carbon	1/4W	47Ω	±5%	1
R5435	RCE0753	R,Carbon	1/4W	47Ω	±5%	1
R5437	RME0892	R,Metal	1/8W	22kΩ	±5%	1
R5438	RME0880	R,Metal	1/8W	2.2kΩ	±5%	1
R5439	RME0892	R,Metal	1/8W	22kΩ	±5%	1
R5440	RME0880	R,Metal	1/8W	2.2kΩ	±5%	1
R5444	RCE0785	R,Carbon	1/4W	22kΩ	±5%	1
R5445	RCE0769	R,Carbon	1/4W	1.0kΩ	±5%	1
R5446	RCE0769	R,Carbon	1/4W	1.0kΩ	±5%	1
R5447	RCE0769	R,Carbon	1/4W	1.0kΩ	±5%	1
R5448	RCE0769	R,Carbon	1/4W	1.0kΩ	±5%	1
R5449	RCE0769	R,Carbon	1/4W	1.0kΩ	±5%	1
R5450	RME1127	R,Metal	1/4W	6.19kΩ	±1%	1
R5451	RCE0749	R,Carbon	1/4W	22Ω	±5%	1
R5452	RME1125	R,Metal	1/4W	5.11kΩ	±1%	1
R5453	RCE0765	R,Carbon	1/4W	470Ω	±5%	1
R5454	RCE0765	R,Carbon	1/4W	470Ω	±5%	1
R5455	RME1072	R,Metal	1/4W	1.00kΩ	±1%	1
R5456	RCE0757	R,Carbon	1/4W	100Ω	±5%	1
R5457	RCE0757	R,Carbon	1/4W	100Ω	±5%	1
R5458	RCE0769	R,Carbon	1/4W	1.0kΩ	±5%	1
R5459	RCE0773	R,Carbon	1/4W	2.2kΩ	±5%	1
R5463	RCE0757	R,Carbon	1/4W	100Ω	±5%	1
R5464	RME1127	R,Metal	1/4W	6.19kΩ	±1%	1

CPU PEF-826

PART CODE	DESCRIPTION	Q'TY
RCE0753	R,Carbon 1/4W 47Ω ±5%	1
RCE0753	R,Carbon 1/4W 47Ω ±5%	1
RCE0764	R,Carbon 1/4W 390Ω ±5%	1
RME1078	R,Metal 1/4W 3.32kΩ ±1%	1
RME1076	R,Metal 1/4W 2.21kΩ ±1%	1
RZA0224	R,Block EXB-F9E820J	1
RZA0224	R,Block XEB-F9E820J	1
RZA0224	R,Block EXB-F9E820J	1
RZA0224	R,Block EXB-F9E820J	1
RZA0217	R,Block EXB-F9E331J	1
RZA0217	R,Block EXB-F9E331J	1
RZA0217	R,Block EXB-F9E331J	1
RZA0217	R,Block EXB-F9E331J	1
RZA0148	R,Block EXB-F9E-561J	1
RZA0148	R,Block EXB-F9E-561J	1
RNE0052	VR,Metal EVN 39C00YB23(2kΩ)	1
RNE0052	VR,Metal EVN 39C00YB23(2kΩ)	1
RNE0058	VR,Metal EVN 39C00YB13(1kΩ)	1
RNE0052	VR,Metal EVN 39C00YB23(2kΩ)	1
RNE0052	VR,Metal EVN 39C00YB23(2kΩ)	1
RNE0058	VR,Metal EVN 39C00YB13(1kΩ)	1
RNE0050	VR,Metal EVN 39C00YB52(500Ω)	1
RNE0051	VR,Metal EVN 39C00YB14(10kΩ)	1
RNE0050	VR,Metal EVN 39C00YB52(500Ω)	1
HTC0768	Transistor 2SC2408	1
HTA0290	Transistor 2SA1206	1
HTA0290	Transistor 2SA1206	1
HTC0148	Transistor 2SC458-C	1
HTC0768	Transistor 2SC2408	1
HTA0290	Transistor 2SA1206	1
HTA0290	Transistor 2SA1206	1
HTC0148	Transistor 2SC458-C	1
HTA0224	Transistor 2SA1029-D	1
HTC0148	Transistor 2SC458-C	1
HTC0148	Transistor 2SC458-C	1

SYMBOL	PART CODE	DESCRIPTION	Q'TY
C5740	CES0133	C,Al Elyc 50V 47μF ±20%	1
C5741	CES0133	C,Al Elyc 16V 47μF ±20%	1
C5742	CES0133	C,Al Elyc 16V 47μF ±20%	1
C5743	CES0133	C,Al Elyc 16V 47μF ±20%	1
C5750 - 99	CCC1030	C,Ceramic 50V 10000pF +80% -20%	50
C5700	CES0133	C,Al Elyc 16V 47μF ±20%	1
C5701	CCC1160	C,Ceramic 50V 330pF ±10%	1
C5702	CCC1160	C,Ceramic 50V 330pF ±10%	1
C5710	CDE0003	C,2-Layer 5.5V 0.47F +80% -20%	1
C5730	CCC1004	C,Ceramic 50V 39pF ±5%	1
C5731	CQA0122	C,Plastic 50V 47000pF ±10%	1
C5735	CCC1160	C,Ceramic 50V 330pF ±10%	1
C5749	CCC1030	C,Ceramic 50V 10000pF +80% -20%	1
D5712	HDX0055	Diode 1SS165	1
D5713	HDX0055	Diode 1SS165	1
D5714	HDS0437	Diode 1SS133	1
D5715	HDS0437	Diode 1SS133	1
D5716	HDS0437	Diode 1SS133	1
D5717	HDS0437	Diode 1SS133	1
D5720	HDS0407	Diode SR503D (RED)	1
D5721	HDS0407	Diode SR503D (RED)	1
D5722	HDS0407	Diode SR503D (RED)	1
D5723	HDS0407	Diode SR503D (RED)	1
D5724	HDS0407	Diode SR503D (RED)	1
D5725	HDS0407	Diode SR503D (RED)	1
D5700	HDS0437	Diode 1SS133	1
D5701	HDS0437	Diode 1SS133	1
D5710	HDS0437	Diode 1SS133	1
D5711	HDM0139	Diode MTZ 3.3JA	1
	IYT0003	Seal (ROM) 11x11MM T-Type Mat Silver	1
1A	IDH1051	IC,Digital HD74HC74P	1
1B	IDH1024	IC,Digital HD74HC123AP(TC74HC123P)	1
1C	IDH0982	IC,Digital HD74HC0P(TC74HC00P)	1
1D	IDH1051	IC,Digital HD74HC74P	1
1E	IDH1056	IC,Digital HD74HC245P	1
1G	IDM0694	IC,Digital μPD70008C	1
1I	IDH1000	IC,Digital HD74HC08P(TC74HC08P)	1
1J	IDM0695	IC,Digital μPD4464C-20L	1
1K	IDM0695	IC,Digital μPD4464C-20L	1
1L	IDH1018	IC,Digital HD74HC10P	1
1M	IDH1053	IC,Digital HD74HC125P	1
1N	IDH1825	IC,Digital HD74HC299P(TC74HC299P)	1
1O	IDH0985	IC,Digital HD74HC273P(TC74HC273P)	1
2A	IDH1000	IC,Digital HD74HC08P(TC74HC08P)	1
2B	IDH1051	IC,Digital HD74HC74P	1
2C	IDH1288	IC,Digital HD74HC563P	1
2D	IDH1275	IC,Digital HD74HC574P(TC74HC574P)	1
2I	IDH1292	IC,Digital HN27256G-25	1
2I	IYX0041	IC,Socket 10628-01-445	1
2K	IDH0982	IC,Digital HD74HC00P(TC74HC00P)	1
2N	IDH1077	IC,Digital HD74HC154P	1
3A	IDH1088	IC,Digital HD74HC191P	1
3B	IDH1088	IC,Digital HD74HC191P	1
3F	IDH1003	IC,Digital HD74HC32P(TC74HC32P)	1
3F	IDH1175	IC,Digital HD74HC402OP	1
3G	IDH0999	IC,Digital HD74HC04P(TC74HC04P)	1
3I	IDH1051	IC,Digital HD74HC74P	1
3N	IDH1274	IC,Digital HD74HC573P(TC74HC573P)	1

SYMBOL	PART CODE	DESCRIPTION		Q'TY
2L	IDH1003	IC,Digital	HD74HC32P(TC74HC32P)	1
3L	IDH1003	IC,Digital	HD74HC32P(TC74HC32P)	1
3C	IDH1073	IC,Digital	HD74HC85P	1
3D	IDH1073	IC,Digital	HD74HC85P	1
3H	IDH1003	IC,Digital	HD74HC32P(TC74HC32P)	1
3J	IDH1003	IC,Digital	HD74HC32P(TC74HC32P)	1
2E	IDH1005	IC,Digital	HD74HC573P(TC74HC573P)	1
1H	IDH1274	IC,Digital	HD74HC573P(TC74HC573P)	1
2H	IDH1274	IC,Digital	HD74HC573P(TC74HC573P)	1
2J	IDH1005	IC,Digital	HD74HC138P(TC74HC138P)	1
2M	IDH1005	IC,Digital	HD74HC138P(TC74HC138P)	1
3M	IDM1005	IC,Digital	HD74HC138P(TC74HC138P)	1
P5701	JBS0055	Connector	SLEM30R-2	1
P5702	JBS0055	Connector	SLEM30R-2	1
P5703	JBS0054	Connector	SLEM23R-2	1
P5704	JBS0055	Connector	SLEM30R-2	1
P5705	JBB0058	Connector	B12B-XH-A	1
P5706	JBX1867	Connector	3431-1002LCS(34pins)	1
P5707	JBS0066	Connector	S4B-XH-A	1
R5720	RCE0766	R,Carbon	1/4W 560Ω ±5%	1
R5721	RCE0766	R,Carbon	1/4W 560Ω ±5%	1
R5722	RCE0766	R,Carbon	1/4W 560Ω ±5%	1
R5723	RCE0766	R,Carbon	1/4W 560Ω ±5%	1
R5724	RCE0766	R,Carbon	1/4W 560Ω ±5%	1
R5725	RCE0766	R,Carbon	1/4W 560Ω ±5%	1
R5701	RCE0765	R,Carbon	1/4W 470Ω ±5%	1
R5702	RCE0781	R,Carbon	1/4W 10kΩ ±5%	1
R5703	RCE0793	R,Carbon	1/4W 100kΩ ±5%	1
R5704	RCE0793	R,Carbon	1/4W 100kΩ ±5%	1
R5706	RCE0802	R,Carbon	1/4W 1.0MΩ ±5%	1
R5707	RCE0777	R,Carbon	1/4W 4.7kΩ ±5%	1
R5708	RCE0789	R,Carbon	1/4W 47kΩ ±5%	1
R5709	RCE0789	R,Carbon	1/4W 47kΩ ±5%	1
R5710	RCE0755	R,Carbon	1/4W 68Ω ±5%	1
R5711	RCE0776	R,Carbon	1/4W 3.9kΩ ±5%	1
R5712	RCE0773	R,Carbon	1/4W 2.2kΩ ±5%	1
R5713	RCE0763	R,Carbon	1/4W 330Ω ±5%	1
R5714	RCE0763	R,Carbon	1/4W 330Ω ±5%	1
R5715	RCE0777	R,Carbon	1/4W 4.7kΩ ±5%	1
R5716	RCE0781	R,Carbon	1/4W 10kΩ ±5%	1
R5717	RCE0789	R,Carbon	1/4W 47kΩ ±5%	1
R5718	RCE0777	R,Carbon	1/4W 4.7kΩ ±5%	1
R5730	RME1123	R,Metal	1/4W 2.43kΩ ±1%	1
R5731	RME1089	R,Metal	1/4W 26.7kΩ ±1%	1
R5737	RCE0763	R,Carbon	1/4W 330Ω ±5%	1
R5740	RCE0773	R,Carbon	1/4W 2.2kΩ ±5%	1
R5741	RCE0773	R,Carbon	1/4W 2.2kΩ ±5%	1
R5742	RCE0773	R,Carbon	1/4W 2.2kΩ ±5%	1
RM5700	RZA0115	R,Block	EXB-P8-8-473-J	1
RM5701	RZA0115	R,Block	EXB-P8-8-473-J	1
RM5702	RZA0115	R,Block	EXB-P8-8-473-J	1
RM5703	RZA0115	R,Block	EXB-P8-8-473-J	1
S5700	SSP0587	SW,PB	SPUL5-01	1
S5701	SSP0587	SW,PB	SPUL1-02	1
S5702	SSP0587	SW,PB	SPU11-02	1
TR5700	HTC0148	Transistor	2SC458C	1
TR5701	ILU0010	IC,Analog	UN4213	1
TR5710	HTA0224	Transistor	2SA1029D	1

SYMBOL	PART CODE	DESCRIPTION		Q'TY
TR5711	HTC0148	Transistor	2SC458C	1
TR5712	HTA0224	Transistor	2SA1029D	1
X5700	EZZ0078	Extal	CSA4.00MT	1

DISPLAY PEF-827

SYMBOL	PART CODE	DESCRIPTION		Q'TY
C5501	CCC1030	C,Ceramic	50V 10000pF +80% -20%	1
C5502	CCC1030	C,Ceramic	50V 10000pF +80% -20%	1
C5503	CCC1030	C,Ceramic	50V 10000pF +80% -20%	1
C5504	CCC1030	C,Ceramic	50V 10000pF +80% -20%	1
C5505	CCC1030	C,Ceramic	50V 10000pF +80% -20%	1
C5506	CCC1030	C,Ceramic	50V 10000pF +80% -20%	1
C5507	CCC1030	C,Ceramic	50V 10000pF +80% -20%	1
C5508	CCC1030	C,Ceramic	50V 10000pF +80% -20%	1
C5509	CCC1030	C,Ceramic	50V 10000pF +80% -20%	1
C5510	CCC1030	C,Ceramic	50V 10000pF +80% -20%	1
C5511	CCC1030	C,Ceramic	50V 10000pF +80% -20%	1
C5512	CCC1030	C,Ceramic	50V 10000pF +80% -20%	1
C5513	CCC1030	C,Ceramic	50V 10000pF +80% -20%	1
C5514	CCC1030	C,Ceramic	50V 10000pF +80% -20%	1
C5515	CCC1030	C,Ceramic	50V 10000pF +80% -20%	1
C5516	CCC1030	C,Ceramic	50V 10000pF +80% -20%	1
C5516	CES0133	C,Al Elyc	16V 47μF ±20%	1
C5526	CES0133	C,Al Elyc	16V 47μF ±20%	1
C5527	CES0133	C,Al Elyc	16V 47μF ±20%	1
C5528	CES0133	C,Al Elyc	16V 47μF ±20%	1
C5529	CES0133	C,Al Elyc	16V 47μF ±20%	1
C5530	CES0133	C,Al Elyc	16V 47μF ±20%	1
C5531	CCC1030	C,Ceramic	50V 10000pF +80% -20%	1

BOL	PART CODE	DESCRIPTION				Q'TY
32	CCC1030	C,Ceramic	50V	10000pF	+80% -20%	1
33	CCC1030	C,Ceramic	50V	10000pF	+80% -20%	1
50	CES0133	C,Al Elyc	16V	47μF	±20%	1
51	CES0133	C,Al Elyc	16V	47μF	±20%	1
52	CES0133	C,Al Elyc	16V	47μF	±20%	1
53	CES0133	C,Al Elyc	16V	47μF	±20%	1
56	CCC1025	C,Ceramic	50V	100pF	±10%	1
57	CCC1025	C,Ceramic	50V	100pF	±10%	1
58	CES0133	C,Al Elyc	16V	47μF	±20%	1
59	CES0133	C,Al Elyc	16V	47μF	±20%	1
60	CCC1030	C,Ceramic	50V	10000pF	+80% -20%	1
61	CCC1030	C,Ceramic	50V	10000pF	+80% -20%	1
62	CCC1030	C,Ceramic	50V	10000pF	+80% -20%	1
63	CCC1030	C,Ceramic	50V	10000pF	+80% -20%	1
71	CCC1004	C,Ceramic	50V	15pF	±5%	1
80	CES0133	C,Al Elyc	16V	47μF	±20%	1
85	CCC1182	C,Ceramic	50V	1000pF	±10%	1
87	CES0133	C,Al Elyc	16V	47μF	±20%	1
88	CES0133	C,Al Elyc	16V	47μF	±20%	1
02	CES0133	C,Al Elyc	16V	47μF	±20%	1
03	CES0133	C,Al Elyc	16V	47μF	±20%	1
20	CCC1025	C,Ceramic	50V	100pF	±10%	1
31	CCC1030	C,Ceramic	50V	10000pF	+80% -20%	1
32	CCC1030	C,Ceramic	50V	10000pF	+80% -20%	1
34	CCC1030	C,Ceramic	50V	10000pF	+80% -20%	1
35	CCC1030	C,Ceramic	50V	10000pF	+80% -20%	1
38	CCC1182	C,Ceramic	50V	1000pF	±10%	1
39	CCC1182	C,Ceramic	50V	1000pF	±10%	1
42	CCC1160	C,Ceramic	50V	330pF	±10%	1
45	CES0133	C,Al Elyc	16V	47μF	±20%	1
46	CCC1029	C,Ceramic	50V	1000pF	+80% -20%	1
47	CCC1030	C,Ceramic	50V	10000pF	+80% -20%	1
49	CES0133	C,Al Elyc	16V	47μF	±20%	1
50	CCC1027	C,Ceramic	50V	220pF	±10%	1
51	CCC1160	C,Ceramic	50V	330pF	±10%	1
52	CES0133	C,Al Elyc	16V	47μF	±20%	1
53	CES0133	C,Al Elyc	16V	47μF	±20%	1
54	CCC1160	C,Ceramic	50V	330pF	±10%	1
55	CCC1160	C,Ceramic	50V	330pF	±10%	1
56	CCC1160	C,Ceramic	50V	330pF	±10%	1
57	CQA0124	C,Plastic	50V	0.1μF	±10%	1
58	CCC1030	C,Ceramic	50V	10000pF	+80% -20%	1
59	CCC1030	C,Ceramic	50V	10000pF	+80% -20%	1
01	HDS0405	Diode	SG203DA (GRN)			1
02	HDS0407	Diode	SR503D (RED)			1
03	HDS0405	Diode	SG203DA (GRN)			1
10	HDS0437	Diode	1SS133			1
80	ILT0091	IC,Analog	TL431CLP-B			1

SYMBOL	PART CODE	DESCRIPTION		Q'TY
D5585	HDS0437	Diode	1SS133	1
D5586	HDS0437	Diode	1SS133	1
D5601	HDS0437	Diode	1SS133	1
D5602	HDS0437	Diode	1SS133	1
D5603	HDS0437	Diode	1SS133	1
D5604	HDS0437	Diode	1SS133	1
D5605	ILT0091	IC,Analog	TL431CLP-B	1
D5606	HDD0170	Diode	DAP601	1
D5607	HDD0058	Diode	DAP401	1
D5608	HDS0437	Diode	1SS133	1
D5609	HDS0437	Diode	1SS133	1
1B	IDH0982	IC,Digital	HD74HC00P(TC74HC00P)	1
1C	IDH0876	IC,Digital	HD74LS198P	1
1D	IDH1020	IC,Digital	HD74HC157P	1
1E	IDH1020	IC,Digital	HD74HC157P	1
1F	IDM0695	IC,Digital	μPD4464C-20L	1
1G	IDH1000	IC,Ditital	HD74HC08P(TC74HC08P)	1
1H	IDH0982	IC,Digital	HD74HC00P(TC74HC00P)	1
1I	IDH1000	IC,Digital	HD74HC08P(TC74HC08P)	1
1J	IDH1051	IC,Digital	HD74HC74P	1
1K	IDH1051	IC,Digital	HD74HC74P	1
1M	IZH0018	IC,Hybrid	HA17012PB	1
1O	IDH1058	IC,Digital	HD74HC4040P	1
1P	ILN0042	IC,Digital	NJM072S	1
2B	IDH1020	IC,Digital	HD74HC157P	1
2C	IDH1020	IC,Digital	HD74HC157P	1
2D	IDH1056	IC,Digital	HD74HC245P	1
2E	IDH0730	IC,Digital	HD46505RP-1	1
2F	IDH1020	IC,Digital	HD74HC157P	1
2G	IDH1020	IC,Digital	HD74HC157P	1
2I	IDH0982	IC,Digital	HD74HC00P(TC74HC00P)	1
2J	IDH0985	IC,Digital	HD74HC273P(TC74HC273P)	1
2K	ILH0123	IC,Digital	HA17408P	1
2N	ILN0042	IC,Digital	NJM072S	1
3B	IDH1003	IC,Digital	HD74HC32P(TC74HC32P)	1
3C	IDH1000	IC,Digital	HD74HC08P(TC74HC08P)	1
3D	IDH1275	IC,Digital	HD74HC574P(TC74HC574P)	1
3E	IDH1056	IC,Digital	HD74HC245P	1
3F	IDM0695	IC,Digital	μPD4464C-20L	1
3G	IDH0985	IC,Digital	HD74HC273P(TC74HC273P)	1
3H	IDH1274	IC,Digital	HD74HC573P(TC74HC573P)	1
3I	IDH0876	IC,Digital	HD74LS298P	1
3J	IDH1275	IC,Digital	HD74HC574P(TC74HC574P)	1
3K	ILH0123	IC,Analog	HA17408P	1
3N	ILN0042	IC,Analog	NJM072S	1
3Q	IDH0467	IC,Digital	HD74LS00P	1
3R	ILM0431	IC,Digital	M5201L	1
P5501	JBS0055	Connector	SLEM30R-2	1
P5502	JBS0055	Connector	SLEM30R-2	1
P5504	JBS0024	Connector	S8B-XH-A	1
P5505	JBS0066	Connector	S4B-XH-A	1
P5601	JBS0068	Connector	S10B-XH-A	1
P5602	JBS0066	Connector	S4B-XH-A	1
R5500	RME1072	R,Metal	1/4W 1.00kΩ ±1%	1
R5501	RME1118	R,Metal	1/4W 909Ω ±1%	1
R5502	RME1073	R,Metal	1/4W 1.21kΩ ±1%	1
R5503	RME1074	R,Metal	1/4W 1.50kΩ ±1%	1
R5504	RME1074	R,Metal	1/4W 1.50kΩ ±1%	1
R5505	RME1073	R,Metal	1/4W 1.21kΩ ±1%	1
R5506	RME1073	R,Metal	1/4W 1.21kΩ ±1%	1

SYMBOL	PART CODE	DESCRIPTION	Q'TY
R5507	RME1074	R,Metal 1/4W 1.50kΩ ±1%	1
R5508	RME1073	R,Metal 1/4W 1.21kΩ ±1%	1
R5509	RME1074	R,Metal 1/4W 1.50kΩ ±1%	1
R5514	RCE0785	R,Carbon 1/4W 22kΩ ±5%	1
R5535	RCE0768	R,Carbon 1/4W 820Ω ±5%	1
R5536	RCE0767	R,Carbon 1/4W 680Ω ±5%	1
R5540	RCE0767	R,Carbon 1/4W 680Ω ±5%	1
R5541	RCE0759	R,Carbon 1/4W 150Ω ±5%	1
R5542	RCE0763	R,Carbon 1/4W 330Ω ±5%	1
R5543	RCE0763	R,Carbon 1/4W 330Ω ±5%	1
R5544	RCE0763	R,Carbon 1/4W 330Ω ±5%	1
R5545	RCE0763	R,Carbon 1/4W 330Ω ±5%	1
R5546	RCE0763	R,Carbon 1/4W 330Ω ±5%	1
R5547	RCE0763	R,Carbon 1/4W 330Ω ±5%	1
R5548	RCE0763	R,Carbon 1/4W 330Ω ±5%	1
R5549	RCE0820	R,Carbon 1/4W 2kΩ ±5%	1
R5551	RCE0766	R,Carbon 1/4W 560Ω ±5%	1
R5552	RCE0766	R,Carbon 1/4W 560Ω ±5%	1
R5553	RCE0766	R,Carbon 1/4W 560Ω ±5%	1
R5554	RCE0789	R,Carbon 1/4W 47kΩ ±5%	1
R5563	RME1088	R,Metal 1/4W 22.1kΩ ±1%	1
R5565	RME1411	R,Metal 1/4W 9.09kΩ ±1%	1
R5566	RCE0749	R,Carbon 1/4W 22Ω ±5%	1
R5567	RCE0767	R,Carbon 1/4W 680Ω ±5%	1
R5570	RME1371	R,Metal 1/4W 1.65kΩ ±1%	1
R5571	RCE0789	R,Carbon 1/4W 47kΩ ±5%	1
R5575	RCE0749	R,Carbon 1/4W 22Ω ±5%	1
R5576	RCE0749	R,Carbon 1/4W 22Ω ±5%	1
R5580	RCE0763	R,Carbon 1/4W 330Ω ±5%	1
R5581	RME1084	R,Metal 1/4W 10.0kΩ ±1%	1
R5582	RME1084	R,Metal 1/4W 10.0kΩ ±1%	1
R5585	RCE0773	R,Carbon 1/4W 2.2kΩ ±5%	1
R5586	RCE0773	R,Carbon 1/4W 2.2kΩ ±5%	1
R5601	RME1076	R,Metal 1/4W 2.21kΩ ±1%	1
R5602	RCE0785	R,Carbon 1/4W 22kΩ ±5%	1
R5603	RME1083	R,Metal 1/4W 8.25kΩ ±1%	1
R5604	RME1118	R,Metal 1/4W 909Ω ±1%	1
R5605	RME1072	R,Metal 1/4W 1.00kΩ ±1%	1
R5606	RME1072	R,Metal 1/4W 1.00kΩ ±1%	1
R5607	RME1061	R,Metal 1/4W 121Ω ±1%	1
R5608	RME1243	R,Metal 1/4W 3.01kΩ ±1%	1
R5609	RME1083	R,Metal 1/4W 8.25kΩ ±1%	1
R5610	RME1072	R,Metal 1/4W 1.00kΩ ±1%	1
R5613	RCE0789	R,Carbon 1/4W 47kΩ ±5%	1
R5614	RCE0781	R,Carbon 1/4W 10kΩ ±5%	1
R5615	RCE0763	R,Carbon 1/4W 330Ω ±5%	1
R5616	RME1084	R,Metal 1/4W 10.0kΩ ±1%	1
R5617	RME1084	R,Metal 1/4W 10.0kΩ ±1%	1
R5618	RME1119	R,Metal 1/4W 1.15kΩ ±1%	1
R5619	RCE0762	R,Carbon 1/4W 270Ω ±5%	1
R5620	RME1067	R,Metal 1/4W 392Ω ±1%	1
R5621	RCE0785	R,Carbon 1/4W 22kΩ ±5%	1
R5631	RME1076	R,Metal 1/4W 2.21kΩ ±1%	1
R5632	RME1076	R,Metal 1/4W 2.21kΩ ±1%	1
R5633	RME1076	R,Metal 1/4W 2.21kΩ ±1%	1
R5634	RME1076	R,Metal 1/4W 2.21kΩ ±1%	1
R5635	RCE0762	R,Carbon 1/4W 270Ω ±5%	1
R5636	RCE0748	R,Carbon 1/4W 18Ω ±5%	1
R5637	RCE0761	R,Carbon 1/4W 220Ω ±5%	1
R5638	RCE0761	R,Carbon 1/4W 220Ω ±5%	1
R5639	RME1078	R,Metal 1/4W 3.32kΩ ±1%	1
R5640	RCE0748	R,Carbon 1/4W 18Ω ±5%	1
R5641	RCE0761	R,Carbon 1/4W 220Ω ±5%	1

SYMBOL	PART CODE	DESCRIPTION	Q'TY
R5642	RCE0761	R,Carbon 1/4W 220Ω ±5%	1
R5643	RCE0753	R,Carbon 1/4W 47Ω ±5%	1
R5644	RME1064	R,Metal 1/4W 221Ω ±1%	1
R5645	RME1064	R,Metal 1/4W 221Ω ±1%	1
R5647	RCE0769	R,Carbon 1/4W 1.0kΩ ±5%	1
R5648	RCE0789	R,Carbon 1/4W 47kΩ ±5%	1
R5649	RCE0789	R,Carbon 1/4W 47kΩ ±5%	1
R5650	RCE0789	R,Carbon 1/4W 47kΩ ±5%	1
R5651	RCE0789	R,Carbon 1/4W 10kΩ ±5%	1
R5652	RCE0771	R,Carbon 1/4W 1.5kΩ ±5%	1
R5653	RCE0771	R,Carbon 1/4W 1.5kΩ ±5%	1
R5654	RCE0771	R,Carbon 1/4W 1.5kΩ ±5%	1
R5656	RCE0777	R,Carbon 1/4W 4.7kΩ ±5%	1
R5657	RCE0769	R,Carbon 1/4W 1.0kΩ ±5%	1
R5658	RCE0777	R,Carbon 1/4W 4.7kΩ ±5%	1
R5659	RCE0769	R,Carbon 1/4W 1.0kΩ ±5%	1
R5670	RME1076	R,Metal 1/4W 2.21kΩ ±1%	1
R5671	RME1076	R,Metal 1/4W 2.21kΩ ±1%	1
R5672	RME1076	R,Metal 1/4W 2.21kΩ ±1%	1
R5673	RME1076	R,Metal 1/4W 2.21kΩ ±1%	1
R5674	RCE0762	R,Carbon 1/4W 270Ω ±5%	1
R5675	RCE0748	R,Carbon 1/4W 18Ω ±5%	1
R5676	RCE0761	R,Carbon 1/4W 220Ω ±5%	1
R5677	RCE0761	R,Carbon 1/4W 220Ω ±5%	1
R5678	RCE0748	R,Carbon 1/4W 18Ω ±5%	1
R5679	RCE0761	R,Carbon 1/4W 220Ω ±5%	1
R5680	RCE0761	R,Carbon 1/4W 220Ω ±5%	1
R5681	RME1078	R,Metal 1/4W 3.32kΩ ±1%	1
R5682	RCE0753	R,Carbon 1/4W 47Ω ±5%	1
R5683	RCE0769	R,Carbon 1/4W 1.0kΩ ±5%	1
R5684	RME1064	R,Metal 1/4W 221Ω ±1%	1
R5685	RME1064	R,Metal 1/4W 221Ω ±1%	1
R5687	RCE0771	R,Carbon 1/4W 1.5kΩ ±5%	1
R5689	RCE0773	R,Carbon 1/4W 2.2kΩ ±5%	1
R5690	RCE0769	R,Carbon 1/4W 1.0kΩ ±5%	1
R5691	RCE0783	R,Carbon 1/4W 15kΩ ±5%	1
R5692	RCE0777	R,Carbon 1/4W 4.7kΩ ±5%	1
R5694	RCE0785	R,Carbon 1/4W 22kΩ ±5%	1
R5695	RCE0785	R,Carbon 1/4W 22kΩ ±5%	1
R5696	RCE0773	R,Carbon 1/4W 2.2kΩ ±5%	1
R5697	RCE0785	R,Carbon 1/4W 22kΩ ±5%	1
R5698	RCE0785	R,Carbon 1/4W 22kΩ ±5%	1
RM5601	RZA0166	R,Block EXB-LD10-503G	1
RM5602	RZA0115	R,Block EXB-P8-473-J	1
RV5500	RNE0068	VR,Metal EVN 49C00YB14(10kΩ)	1
RV5501	RNE0048	VR,Metal EVN 39C00YB22(200Ω)	1
RV5502	RNE0051	VR,Metal EVN 39C00YB14(10kΩ)	1
RV5504	RNE0077	VR,Metal EVN 49C00YB23(2kΩ)	1
RV5601	RNE0048	VR,Metal EVN 39C00YB22(200Ω)	1
RV5602	RNE0068	VR,Metal EVN 49C00YB14(10kΩ)	1
S5500	SSP0586	SW,PB SPUL1-02	1
S5501	SSP0586	SW,PB SPUL1-02	1
S5502	SSP0585	SW,PB SPUL1-01	1
S5503	SSP0585	SW,PB SPUL1-01	1
S5504	SSP0585	SW,PB SPUL1-01	1
S5505	SSP0585	SW,PB SPUL1-01	1
S5506	SSP0586	SW,PB SPUL1-02	1
S5507	SSP0585	SW,PB SPUL1-01	1
TR5503	ILU0010	IC,Analog UN4213	1

PART CODE	DESCRIPTION	Q'TY
ILU0010	IC,Analog UN4213	1
ILU0010	IC,Analog UN4213	1
ILU0010	IC,Analog UN4213	1
HTC0148	Transistor 2SC458C	1
HTC0148	Transistor 2SC458C	1
HTC0148	Transistor 2SC458C	1
HTC0148	Transistor 2SC458C	1
HTC0148	Transistor 2SC458C	1
HTC0148	Transistor 2SC458C	1
HTC0148	Transistor 2SC458C	1
HTC0148	Transistor 2SC458C	1
HTC0148	Transistor 2SC458C	1
HTC0148	Transistor 2SC458C	1
HTC0148	Transistor 2SC458C	1
HTC0148	Transistor 2SC458C	1
HTC0148	Transistor 2SC458C	1
HTC0148	Transistor 2SC458C	1
HTC0148	Transistor 2SC458C	1
HTC0148	Transistor 2SC458C	1

330 GPIB

PART CODE	DESCRIPTION	Q'TY
CCC1030	C,Ceramic 50V 10000PF +80% -20%	1
CES0133	C,AL Elyc 16V 47µF ±20%	1
CCC1030	C,Ceramic 50V 10000PF +80% -20%	1
CCC1030	C,Ceramic 50V 10000PF +80% -20%	1
CCC1030	C,Ceramic 50V 10000PF +80% -20%	1
CCC1030	C,Ceramic 50V 10000PF +80% -20%	1
CCC1030	C,Ceramic 50V 10000PF +80% -20%	1
CES0133	C,AL Elyc 16V 47µF ±20%	1
CEK0212	C,AL Elyc 16V 470µF ±20%	1
CEK0212	C,AL Elyc 16V 470µF ±20%	1
CES0133	C,AL Elyc 16V 47µF ±20%	1
CES0133	C,AL Elyc 16V 47µF ±20%	1
CES0133	C,AL Elyc 16V 47µF ±20%	1
CES0133	C,AL Elyc 16V 47µF ±20%	1
CES0133	C,AL Elyc 16V 47µF ±20%	1
CES0133	C,AL Elyc 16V 47µF ±20%	1
CES0133	C,AL Elyc 16V 47µF ±20%	1
CCC1030	C,Ceramic 50V 10000PF +80% -20%	1
CCC1030	C,Ceramic 50V 10000PF +80% -20%	1

SYMBOL	PART CODE	DESCRIPTION	Q'TY
C7808	CCC1030	C,Ceramic 50V 10000PF +80% -20%	1
C7809	CCC1030	C,Ceramic 50V 10000PF +80% -20%	1
C7810	CCC1030	C,Ceramic 50V 10000PF +80% -20%	1
C7811	CCC1030	C,Ceramic 50V 10000PF +80% -20%	1
C7812	CCC1030	C,Ceramic 50V 10000PF +80% -20%	1
C7813	CCC1030	C,Ceramic 50V 10000PF +80% -20%	1
C7814	CCC1025	C,Ceramic 50V 100PF ±10%	1
C7815	CCC1015	C,Ceramic 50V 56PF ±5%	1
IC5801	IDH0999	IC,Digital HD74HC04P(TC74HC04P)	1
IC5802	IDS0392	IC,Digital TMS9914ANL	1
IC5803	IDS0390	IC,Digital SN75160N	1
IC5804	IDS0391	IC,Digital SN75161N	1
IC5805	IDH1274	IC,Digital HD74HC573P(TC74HC573P)	1
IC5806	IDH1053	IC,Digital HD74HC125P	1
IC5807	ILT0091	IC,Analog TL431CLP-B	1
IC7801	IDM0379	IC,Digital µPD8225AC-5	1
IC7802	ILH0123	IC,Analog HA17408P	1
IC7803	IZH0018	IC,Hybrid HA17012PB	1
IC7804	ILN0037	IC,Analog NJM4558S	1
L5851	TLE0061	Coil EL0606SK1 22µH ±10%	1
P5802	JBB0022	Connector B6B-XH-A	1
P5803	JBS0022	Connector S3B-XH-A	1
P5804	JBS0023	Connector S6B-XH-A	1
P5806	JBS0022	Connector S3B-XH-A	1
P5807	JBX1867	Connector 3431-1002LCS	1
P5808	JBS0023	Connector S6B-XH-A	1
R5801	RCE0783	R,Carbon 1/4W 15kΩ ±5%	1
R5802	RCE0769	R,Carbon 1/4W 1.0kΩ ±5%	1
R5811	RCE0789	R,Carbon 1/4W 47kΩ ±5%	1
R5812	RCE0789	R,Carbon 1/4W 47kΩ ±5%	1
R5813	RCE0789	R,Carbon 1/4W 47kΩ ±5%	1
R5814	RCE0789	R,Carbon 1/4W 47kΩ ±5%	1
R5815	RCE0789	R,Carbon 1/4W 47kΩ ±5%	1
R5852	RCE0757	R,Carbon 1/4W 100Ω ±5%	1
R5853	RME1083	R,Metal 1/4W 8.25kΩ ±1%	1
R5854	RME1081	R,Metal 1/4W 5.62kΩ ±1%	1
R5855	RCE0767	R,Carbon 1/4W 680Ω ±5%	1
R5856	RCE0819	R,Carbon 1/4W 3kΩ ±5%	1
R5857	RCE0821	R,Carbon 1/4W 6.2kΩ ±5%	1
R7800	RCE0781	R,Carbon 1/4W 10kΩ ±5%	1
R7801	RCE0769	R,Carbon 1/4W 1.0kΩ ±5%	1
R7802	RCE0757	R,Carbon 1/4W 100Ω ±5%	1
R7803	RCE0757	R,Carbon 1/4W 100Ω ±5%	1
R7804	RME1078	R,Metal 1/4W 3.32kΩ ±1%	1
R7806	RME1244	R,Metal 1/4W 3.65kΩ ±1%	1
R7808	RME1193	R,Metal 1/4W 11.0kΩ ±1%	1
R7810	RME1085	R,Metal 1/4W 12.1kΩ ±1%	1
R7812	RME1073	R,Metal 1/4W 1.21kΩ ±1%	1
R7813	RME1081	R,Metal 1/4W 5.62kΩ ±1%	1
R7814	RME1412	R,Metal 1/4W 4.32kΩ ±1%	1
R7815	RCE0749	R,Carbon 1/4W 22Ω ±5%	1
RM5801	RZA0115	R,Bloc EXB-P8-8-473-J	1

SYMBOL	PART CODE	DESCRIPTION		Q'TY
RV7801	RNE0071	VR,Metal	EVN 49C00YB52(500Ω)	1
RV7802	RNE0071	VR,Metal	EVN 49C00YB52(500Ω)	1
TR5851	HTC0148	Transistor	2SC458-C	1
TR5852	HTD0145	Transistor	2SD1267AP	1
TR7800	HTC0148	Transistor	2SC458-C	1

PEF-831 I/O CONNECTOR

SYMBOL	PART CODE	DESCRIPTION		Q'TY
J5871	JBX2209	Connector	57LE-20240-77C0D35G	1
S5870	SSL0069	SW,Lever	DNT-6	1
S5871	SSP0440	SW,PB	SUJ1	1
S5872	SSP0440	SW,PB	SUJ1	1
S5873	SSP0440	SW,PB	SUJ1	1
S5874	SSP0440	SW,PB	SUJ11	1

PEF-842 ILLUMI VR

SYMBOL	PART CODE	DESCRIPTION		Q'TY
P5800	JBB0027	Connector	B2B-XH-A	1
P5805	JBB0022	Connector	B6B-XH-A	1
RV5800	RDV0546	VR,Carbon	V12L5(PVB)N10kΩ SHAFT18	1

PEF-841 ILLUMI

SYMBOL	PART CODE	DESCRIPTION		Q'TY
PL7000	ELL0081	Lamp	12V 0.11A	1
PL7001	ELL0081	Lamp	12V 0.11A	1
PL7002	ELL0081	Lamp	12V 0.11A	1

PEF-829 AC INPUT

SYMBOL	PART CODE	DESCRIPTION		Q'TY
	8488852	Sheet	25X36 UL94V-1	1
C7000	CCD0338	C,Ceramic	DE7100F222M-VA1-KC	1
C7001	CCD0338	C,Ceramic	DE7100F222M-VA1-KC	1
C7004	CCS0016	Capacitor	SC45F1H473Z	1
C7005	CCC1030	C,Ceramic	50V 10000PF +80% -20%	1
C7010	CCD0246	C,Ceramic	2kV 1000PF ±10%	1
C7011	CCD0246	C,Ceramic	2kV 1000PF ±10%	1
C7012	CEK0143	C,AL Elyc	25V 47μF ±20%	1
C7014	CEK0087	C,AL Elyc	50V 4.7μF ±20%	1
C7016	CEK0185	C,AL Elyc	50V 33μF ±20%	1
C7017	CCD0246	C,Ceramic	2kV 1000PF ±10%	1
C7020	CES0325	C,AL Elyc	25V 680μF ±20%	1
C7030	CES0336	C,AL Elyc	35V 2200μF ±20%	1
C7040	CES0325	C,AL Elyc	25V 680μF ±20%	1
C7050	CES0326	C,AL Elyc	25V 2200μF ±20%	1
C7060	CES0326	C,AL Elyc	25V 2200μF ±20%	1
C7070	CES0325	C,AL Elyc	25V 680μF ±20%	1
C7002	CEK0224	C,AL Elyc	400V 150μF ±20%	1
C7003	CEK0224	C,AL Elyc	400V 150μF ±20%	1
D7000	HDR0234	Diode	RBV-406	1
D7001	HDD0141	Diode	DTA10E	1
D7002	HDA0071	Diode	AU01	1
D7003	HDA0071	Diode	AU01	1
D7004	HDG0099	Diode	GZB 3.6	1
D7006	HDA0071	Diode	AU01	1
D7007	HDG0099	Diode	GZB 3.6	1
D7020	HDV0085	Diode	V19C	1
D7030	HDS0575	Diode	SB100-09	1
D7031	HDH0019	Diode	HZ12B	1
D7040	HDV0085	Diode	V19C	1
D7050	HDE0062	Diode	ERC84-009	1
D7060	HDS0553	Diode	SB50-18 (180V 5A)	1
D7070	HDV0085	Diode	V19C	1
IC7000	ILS0089	IC,Analog	STK-7309	1
IC7005	ILS0076	IC,Analog	S22MD1	1
IC7005	ILS0076	IC,Analog	S22MD1	1
J7000	ETZ0121	Tab	62747-1	1
J7001	ETS0162	Tab	62747-1	1
J7033	ETS0162	Pin	3022-03A	1

BOL	PART CODE	DESCRIPTION		Q'TY
100	TLL0174	Coil	LC0243	1
10	TLX0175	Coil	BL02RN1-R62	1
00	JBB0024	Connector	B15B-XH-A	1
40	JBB0021	Connector	B3B-XH-A	1
00	RWK0003	R,Wire	3W 10Ω ±5%	1
01	RCE0718	R,Carbon	1/2W 12kΩ ±5%	1
02	RCE0685	R,Carbon	1/2W 22Ω ±5%	1
03	RME1494	R,Metal	2W 100kΩ ±5%	1
04	RCE0729	R,Carbon	1/2W 100kΩ ±5%	1
05	RCE0712	R,Carbon	1/2W 3.9kΩ ±5%	1
08	RWK0006	R,Wire	3W 1.0Ω ±5%	1
09	RZZ0029	R,Fuse	1/2W 10Ω ±0.5%	1
11	RME1540	R,Metal	ERG-3SJ680P (3W,68Ω,±5%)	1
14	RCE0769	R,Carbon	1/4W 1.0kΩ ±5%	1
15	RME1086	R,Metal	1/4W 15.0kΩ ±1%	1
16	RME1081	R,Metal	1/4W 5.62kΩ ±1%	1
32	RCE0763	R,Carbon	1/4W 330Ω ±5%	1
33	RCE0769	R,Carbon	1/4W 1.0kΩ ±5%	1
06	RCE0701	R,Carbon	1/2W 470Ω ±5%	1
07	RCE0701	R,Carbon	1/2W 470Ω ±5%	1
015	RNE0074	VR,Metal	EVN 49C00YB53 (5kΩ)	1
00	8488413	XFMR	HTHILA042	1
005	HTC0148	Transistor	2SC458-C	1
006	HTD0203	Transistor	2SD1207R	1
030	HTC0148	Transistor	2SC458-C	1
	8480992	Sheet	35X65 UL94V-1	1

F-840 PS-FILTER

BOL	PART CODE	DESCRIPTION		Q'TY
021	CES0309	C,Al Elyc	25V 470μF ±20%	1
031	CES0336	C,Al Elyc	35V 2200μF ±20%	1
032	CES0326	C,Al Elyc	25V 2200μF ±20%	1
033	CES0309	C,Al Elyc	25V 470μF ±20%	1
051	CES0326	C,Al Elyc	25V 2200μF ±20%	1
061	CES0326	C,Al Elyc	25V 2200μF ±20%	1
062	CES0309	C,Al Elyc	25V 470μF ±20%	1
071	CES0309	C,Al Elyc	25V 470μF ±20%	1
020	TLT0092	Coil	470μH±10% 0.46A	1
030	TLT0088	Coil	10μH±20% 3.2A	1
031	TLT0089	Coil	10μH±10% 1.0A	1
032	TLE0171	Coil	ELO607SKI 220k (22μH)	1
050	TLT0089	Coil	100μH±10% 1.0A	1
060	TLT0090	Coil	150μH±10% 0.82A	1

SYMBOL	PART CODE	DESCRIPTION		Q'TY
L7061	TLT0091	Coil	220μH±10% 0.68A	1
L7070	TLT0089	Coil	100μH±10% 1.0A	1
L7080	TLX0175	Coil	BL02RN1-R62	1
L7081	TLX0175	Coil	BL02RN1-R62	1
P7001	JBS0025	Connector	S15B-XH-A	1
P7002	JBB0024	Connector	B15B-XH-A	1
P7003	JBB0023	Connector	B8B-XH-A	1
P7004	JBB0022	Connector	B6B-XH-A	1

SWITING REGURATOR UNIT

SYMBOL	PART CODE	DESCRIPTION		Q'TY
F7000	EFG0713	Fuse	250V-5A UL	2
FL7000	AFM0014	Nois Fil	MBW-1202-22	1
J1501	JSG0002	Socet	GSI42R32-3111-150	1
SG7000	EZH0084		AG20 P C 252F-L3N	1

CHASSIS

SYMBOL	PART CODE	DESCRIPTION		Q'TY
	3211476 A	Cable,Assy	FOR ROT,COIL	1
	ERL0093	Cable Tie	SKB-4M	1
	3211499 SA	Cable,Assy	3211499-SA	1
	3211499 RA	Cable,Assy	3211499-RA	1
	3211499 QA	Cable,Assy	3211499-QA	1
	3211499 PA	Cable,Assy	3211499-PA	1
	3211499 OA	Cable,Assy	3211499-OA	1
	3211499 ND	Cable,Assy	3211499-ND	1
	3211499 NC	Cable,Assy	3211499-NC	1
	3211499 NB	Cable,Assy	3211499-NB	1
	3211499 NA	Cable,Assy	3211499-NA	1
	3211499 MA	Cable,Assy	3211499-MA	1

SYMBOL	PART CODE	DESCRIPTION				Q'TY
	3211499 LA	Cable,Assy	3211499-LA			1
	3211499 KA	Cable,Assy	3211499-KA			1
	3211499 JA	Cable,Assy	3211499-JA			1
	3211499 IA	Cable,Assy	3211499-IA			1
	3211499 HA	Cable,Assy	3211499-HA			1
	3211499 GA	Cable,Assy	3211499-GA			1
	3211499 FA	Cable,Assy	3211499-FA			1
	3211499 CB	Cable,Assy	3211499-CB			1
	3211499 BB	Cable,Assy	3211499-BB			1
	3211499 AB	Cable,Assy	3211499-AB			1
	3211499 AA	Cable,Assy	3211499-AA			1
	3211500 A	Cable,Assy	FOR VC-6165			1
	8483437 E	Cable,Flat	SMCD15X260BDX10 P=1.25			1
	8483437 D	Cable,Flat	SMCD30X70BDX10 P=1.25MM			1
	8483437 C	Cable,Flat	SMCD23X70BDX10 P=1.25MM			1
	8483437 A	Cable,Flat	SMCD30X40ADX10 P=1.25MM			1
	3214803 B	Cable,Assy	UL20012-ST34X28AWG			1
	3214803 A	Cable,Assy	336534			1
	8478324 4	Cable,Assy	FASTON60196-3 L=150MM WHT			1
	8478324 3	Cable,Assy	FASTON60196-3 L=150MM BLK			1
	8478324 2	Cable,Assy	FASTON60288-2 L=170MM WHT			1
	8478324 1	Cable,Assy	FASTON60288-2 L=170MM BLK			1
	8483481 3	Cable,Assy				1
	8483481 2	Cable,Assy				1
	8483481 1	Cable,Assy				1
	8482914	Dlyline	VC-6165			1
	3211475 VA	Cable,Assy	3211475-VA			1
	3211475 TA	Cable,Assy	3211475-TA			1
	3211475 SA	Cable,Assy	3211475-SA			1
	3211475 RA	Cable,Assy	3211475-RA			1
	3211475 QA	Cable,Assy	3211475-QA			1
	3211475 PA	Cable,Assy	3211475-PA			1
	3211475 NB	Cable,Assy	3211475-NB			1
	3211475 NA	Cable,Assy	3211475-NA			1
	3211475 HA	Cable,Assy	3211475-HA			1
	3211475 EA	Cable,Assy	3211475-EA			1
	3211475 DA	Cable,Assy	3211475-DA			1
	3211475 CB	Cable,Assy	3211475-CB			1
	3211475 CA	Cable,Assy	3211475-CA			1
	3211475 BA	Cable,Assy	3211475-BA			1
	3214840 A	Cable,Assy	3214840-A			1
	3211499 WA	Cable,Assy	3211499-WA			1
	3211499 VA	Cable,Assy	3211499-VA			1
	3211499 UA	Cable,Assy	3211499-UA			1
	3211499 TA	Cable,Assy	3211499-TA			1
C10	CCC1013	C,Ceramic	50V	39pF	±5%	1
C110	CCC1013	C,Ceramic	50V	39pF	±5%	1
C303	CCC1136	C,Ceramic	50V	100pF	±5%	1
FA5800	8481022	Motor,Fan	DF92FT-102H			1
J1	JHB0088	Coax,Con	BNC071			1
J101	JHB0088	Coax,Con	BNC071			1
J301	JHB0088	Coax,Con	BNC071			1
J302	JHB0088	Coax,Con	BNC071			1
J502	8474249	Tip	CZ121			1
J2605	JHB0088	Coax,Con	BNC071			1
J5800	JHB0088	Coax,Con	BNC071			1
J5801	JHB0088	Coax,Con	BNC071			1

SYMBOL	PART CODE	DESCRIPTION				Q'TY
J5802	JHB0088	Coax,Con	BNC071			1
R1	RCE0745	R,Carbon	1/4W	10Ω	±5%	1
R101	RCE0745	R,Carbon	1/4W	10Ω	±5%	1
R301	RCE0756	R,Carbon	1/4W	82Ω	±5%	1
V1001	DPX0091	CRT	E8354B31			1

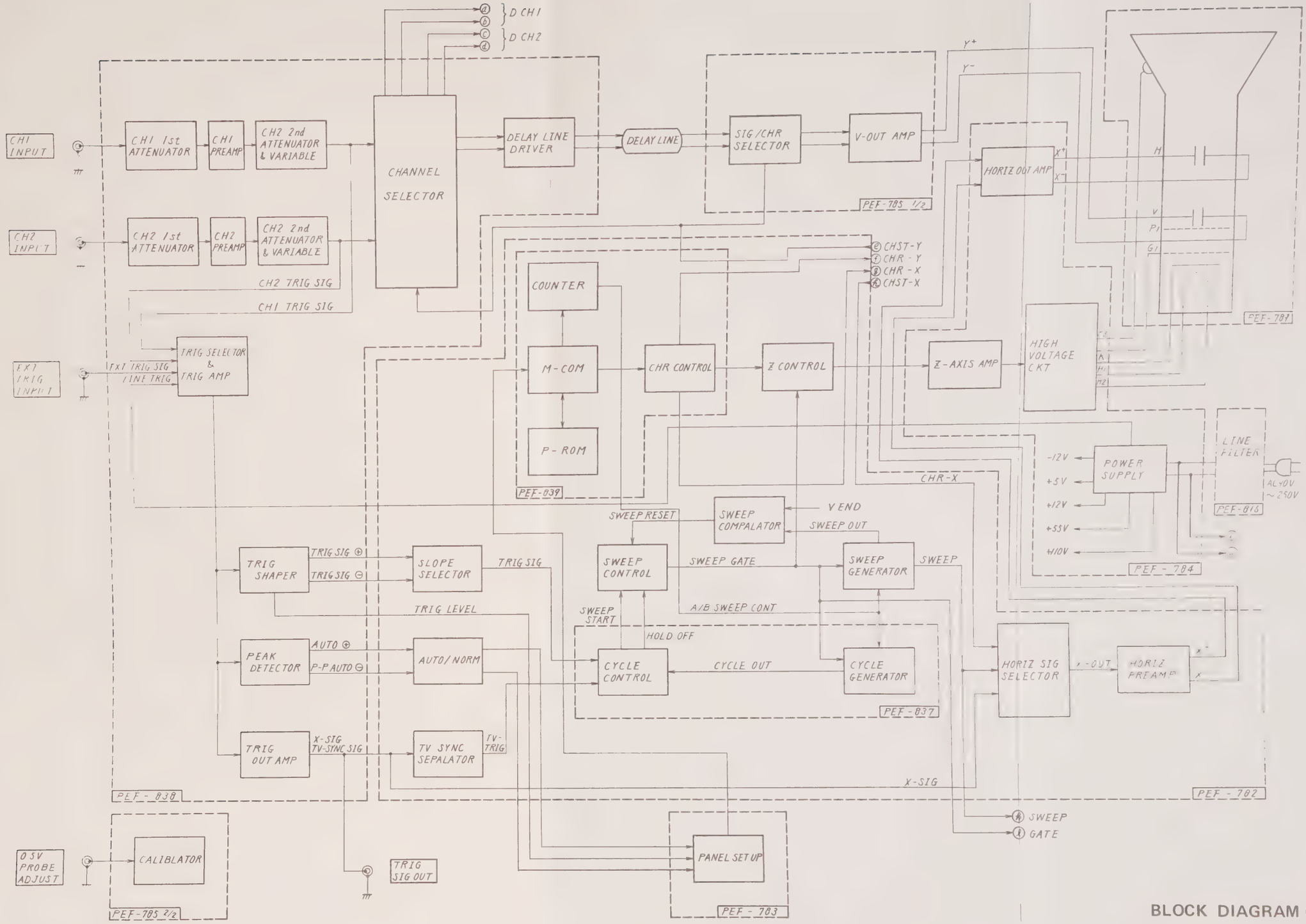

BLOCK DIAGRAM (1/2)

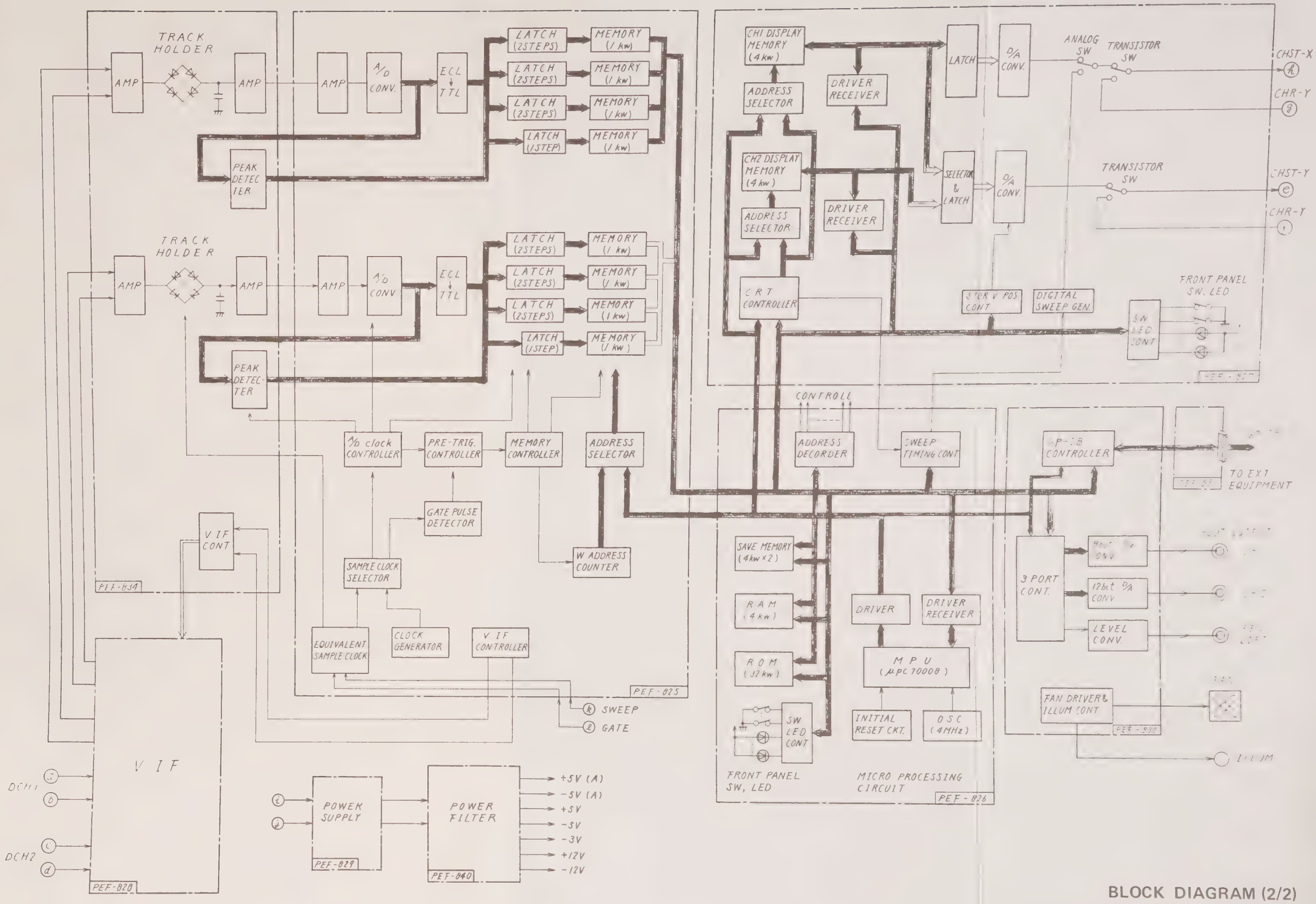

BLOCK DIAGRAM (2/2)

10. SCHEMATIC DIAGRAM

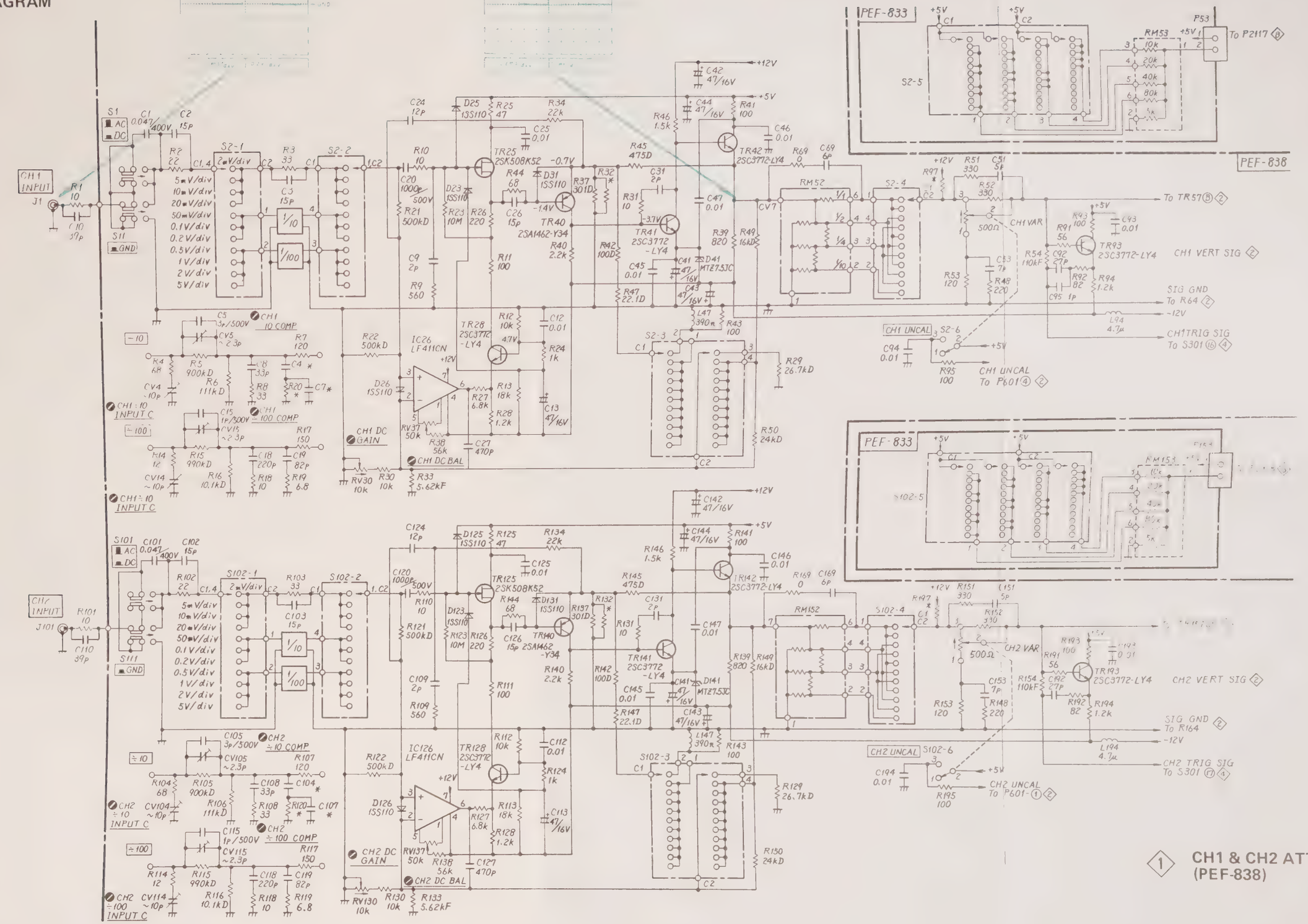

1 CH1 & CH2 ATT (PEF-838)

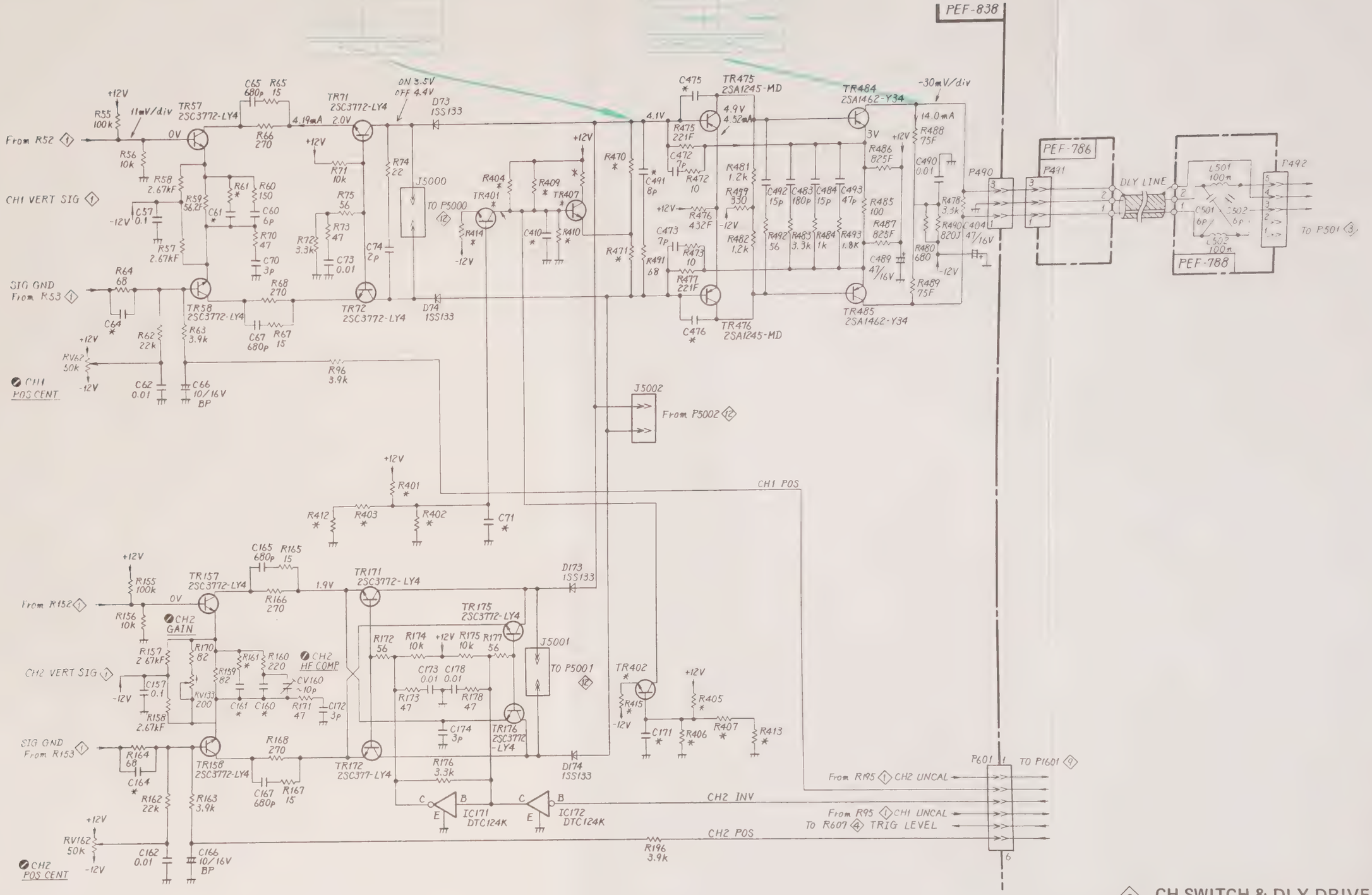

2 CH SWITCH & DLY DRIVER (PEF-838)

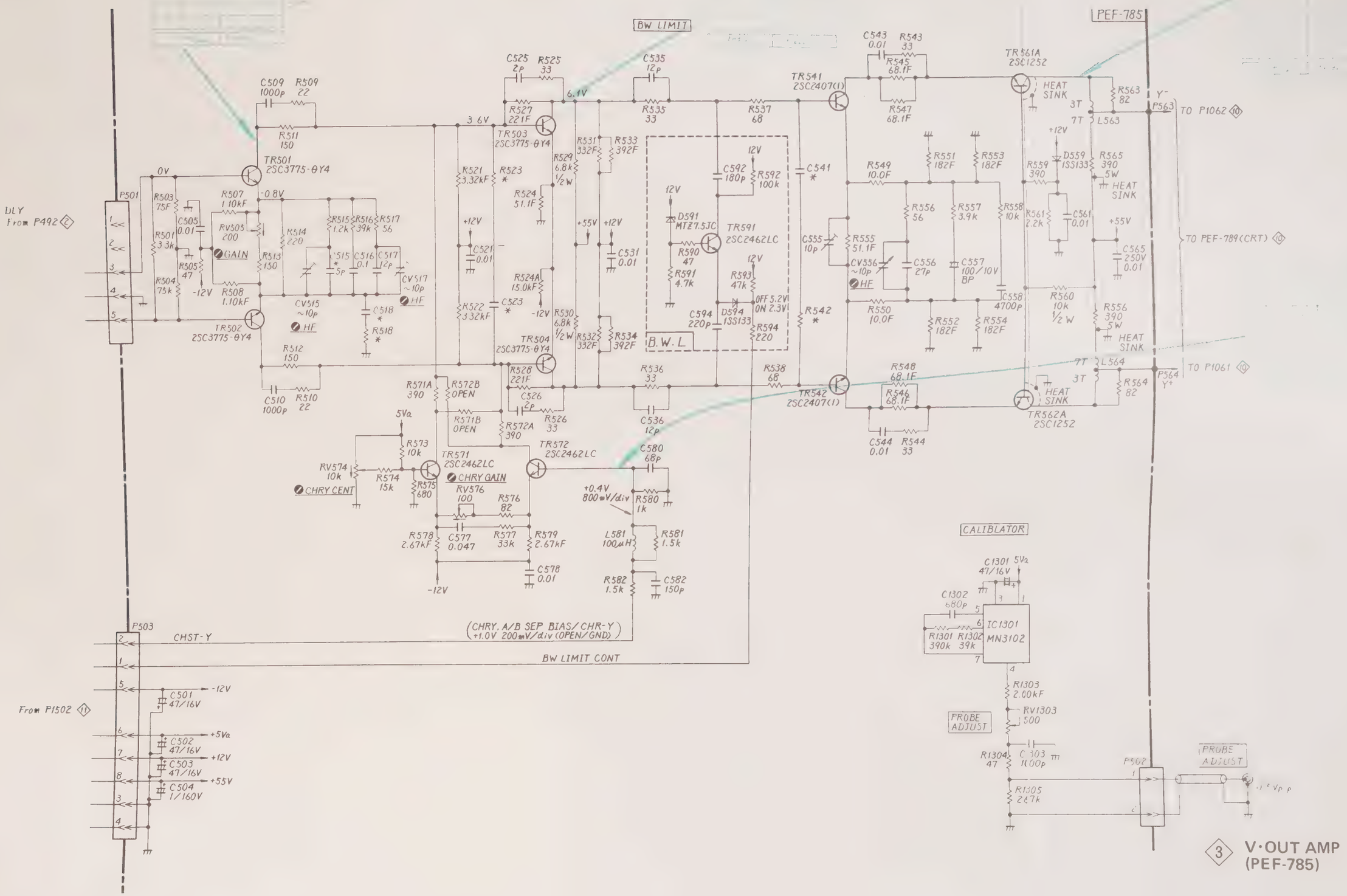
PEF-785
BW LIMIT
DLY From P492 (2)
P501
TR501 2SC3775-BY4
TR502 2SC3775-BY4
TR503 2SC3775-BY4
TR504 2SC3775-BY4
TR541 2SC2407(1)
TR542 2SC2407(1)
TR561A 2SC1252
TR562A 2SC1252
TR571 2SC2462LC
TR572 2SC2462LC
TR591 2SC2462LC
HEAT SINK
GAIN
HF
CHRY CENT
CHRY GAIN
B.W.L
Y- P563 TO P1062 (10)
Y+ P564 TO P1061 (10)
TO PEF-789(CRT) (10)
P503
CHST-Y
BW LIMIT CONT
(CHRY. A/B SEP BIAS/CHR-Y) +1.0V 200mV/div (OPEN/GND)
From P1502 (11)
CALIBLATOR
IC1301 MN3102
PROBE ADJUST
P502
V·OUT AMP (PEF-785)

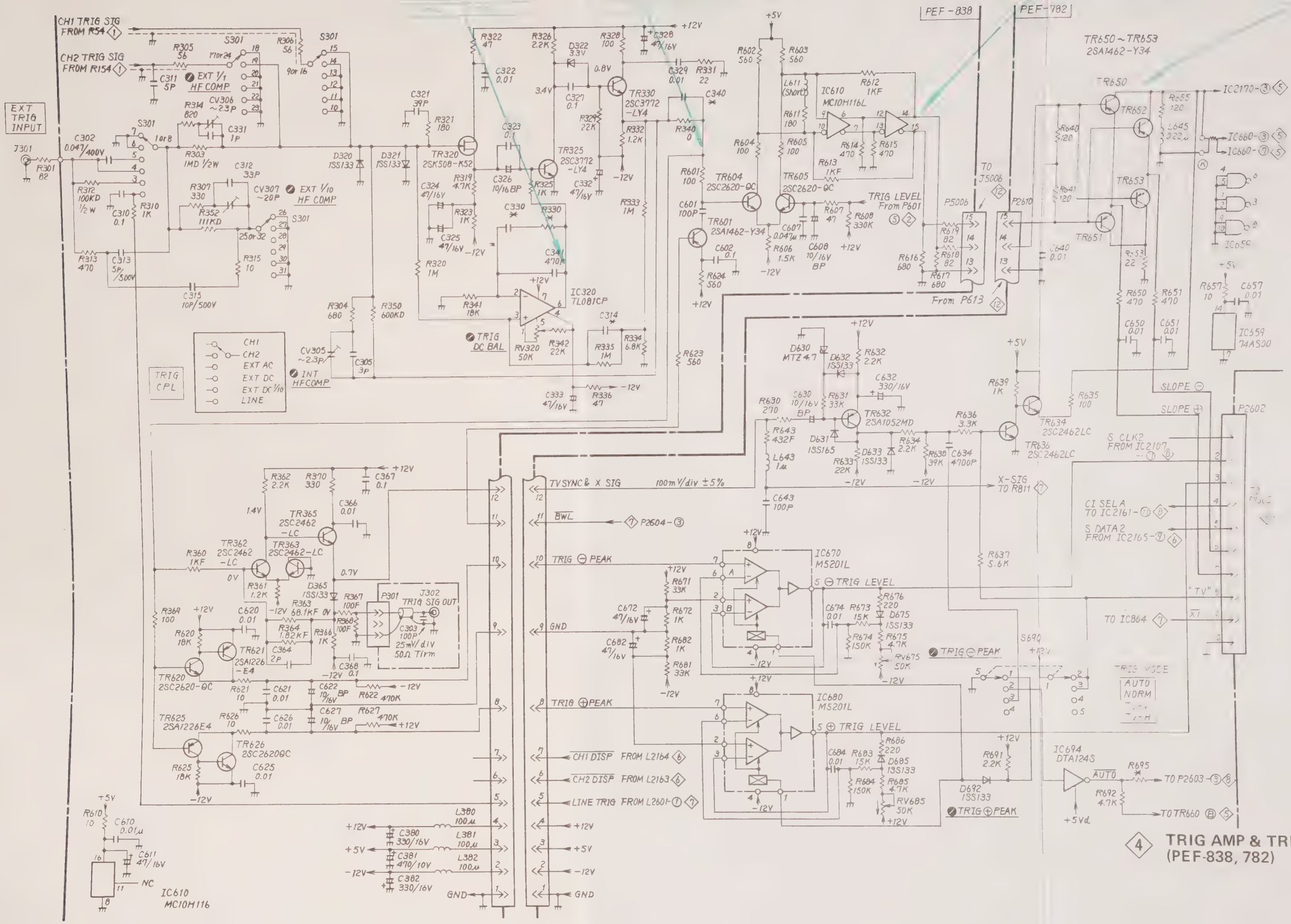

④ TRIG AMP & TRIG GEN (PEF-838, 782)

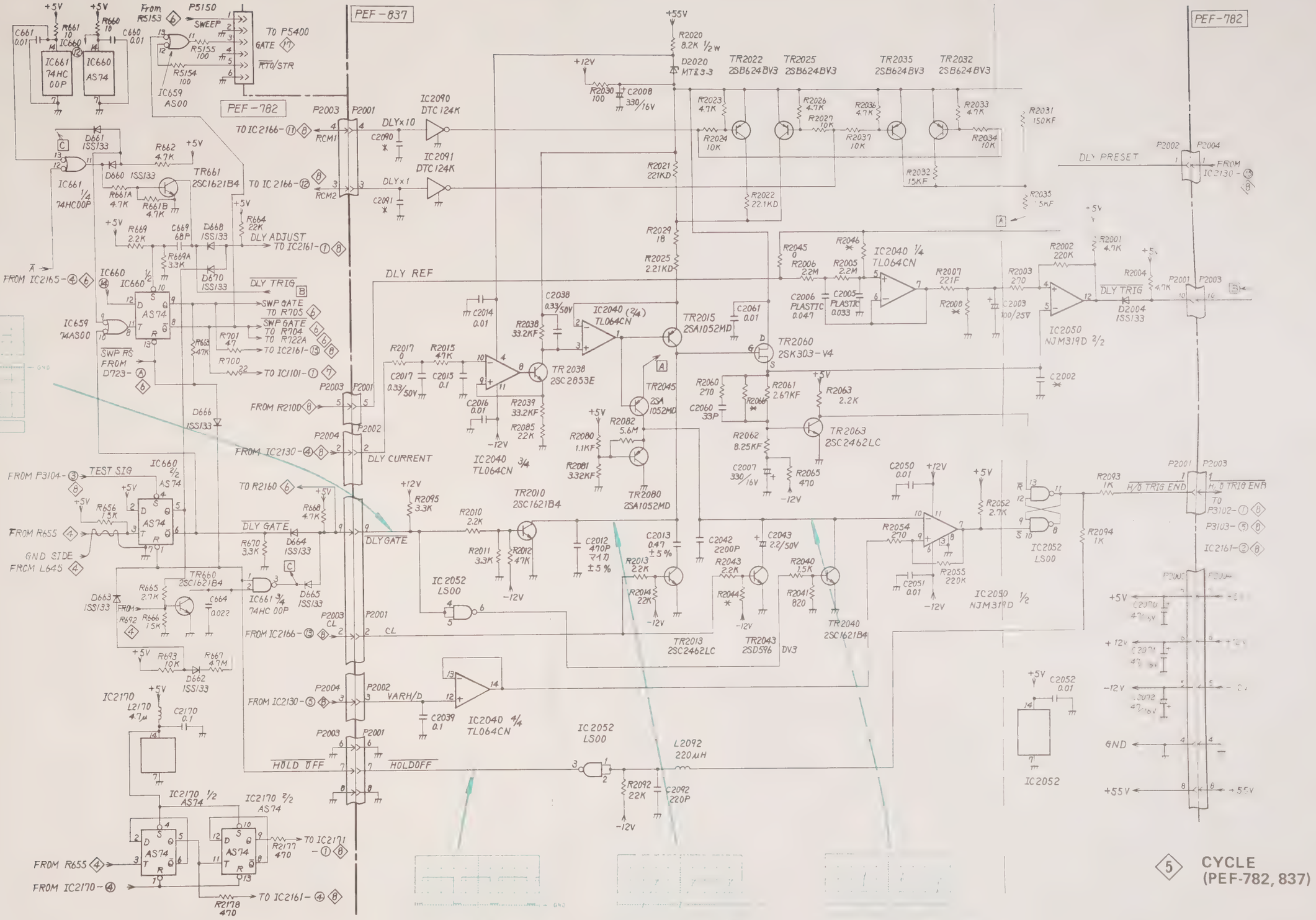
PEF-837
PEF-782
PEF-782
DLY REF
DLY PRESET
DLY ADJUST
DLY TRIG
DLY GATE
DLY CURRENT
HOLD OFF
HOLDOFF
TEST SIG
SWEEP
GATE
RTO/STR
SWP GATE TO R705
SWP GATE TO R704
SWP RS FROM D723-
DLY×10
DLY×1
RCM1
RCM2
VARH/D
CL
H/D TRIG END
H/D TRIG ENB
GND SIDE FROM L645
TO P5400
TO IC2161-
TO IC2166-
FROM IC2130-
FROM IC2166-
FROM IC2165-
FROM IC2100-
FROM R655
FROM IC2170-
TO IC2171
TO P3102-
TO P3103-
IC2040 1/4 TL064CN
IC2040 2/4 TL064CN
IC2040 3/4 TL064CN
IC2040 4/4 TL064CN
IC2050 NJM319D 2/2
IC2090 NJM319D 1/2
IC2052 LS00
IC2170 1/2 AS74
IC2170 2/2 AS74
TR2015 2SA1052MD
TR2060 2SK303-V4
TR2038 2SC2853E
TR2045 2SA1052MD
TR2080 2SA1052MD
TR2063 2SC2462LC
TR2010 2SC1621B4
TR2013 2SC2462LC
TR2043 2SD596 DV3
TR2040 2SC1621B4
TR2022 2SB624BV3
TR2025 2SB624BV3
TR2035 2SB624BV3
TR2032 2SB624BV3
TR661 2SC1621B4
TR660 2SC1621B4
D2020 MTE3-3
D2004 ISS133
IC2052
L2092 220μH
5 CYCLE (PEF-782, 837)

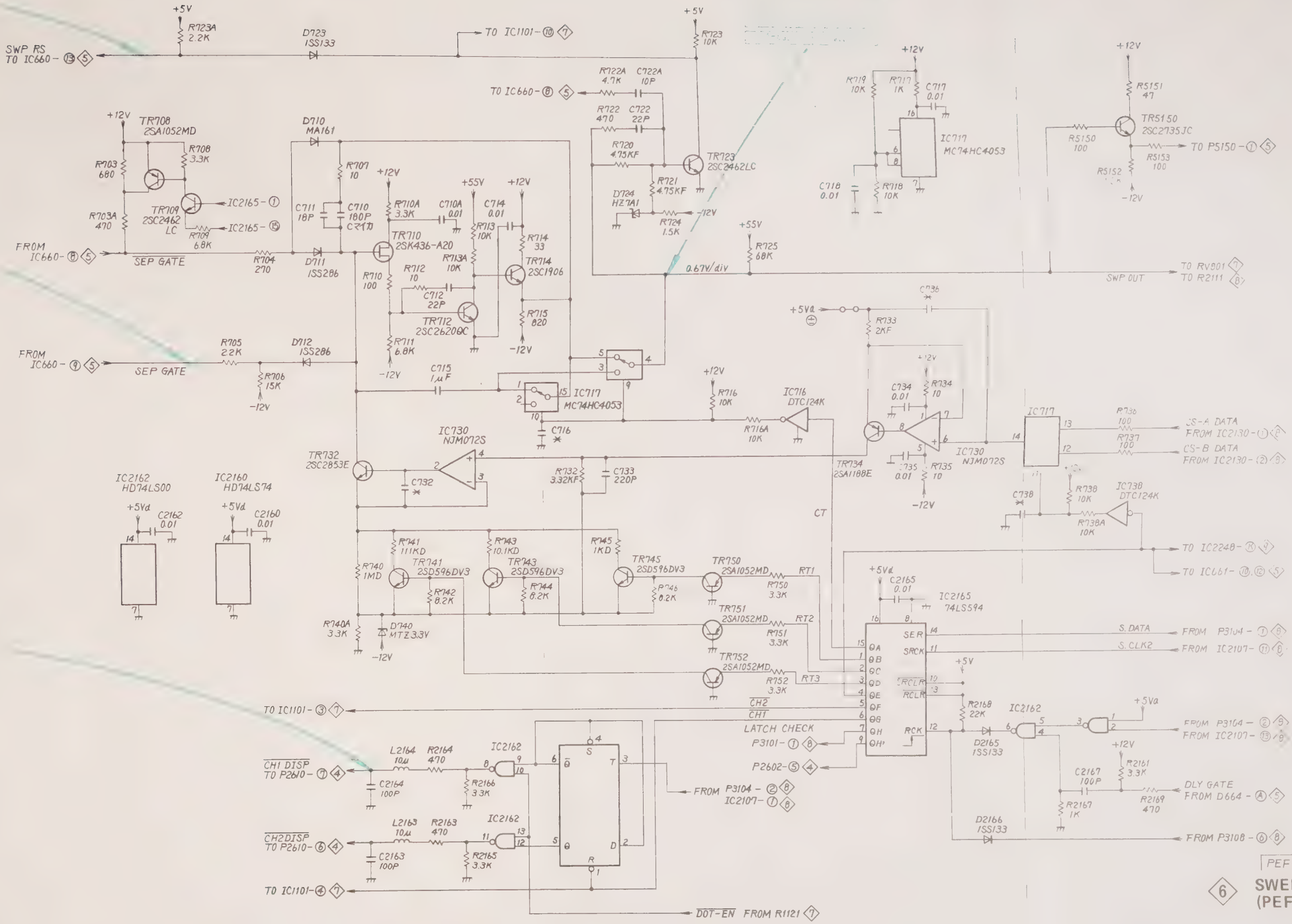

PEF-782

⑥ SWEEP GEN (PEF-782)

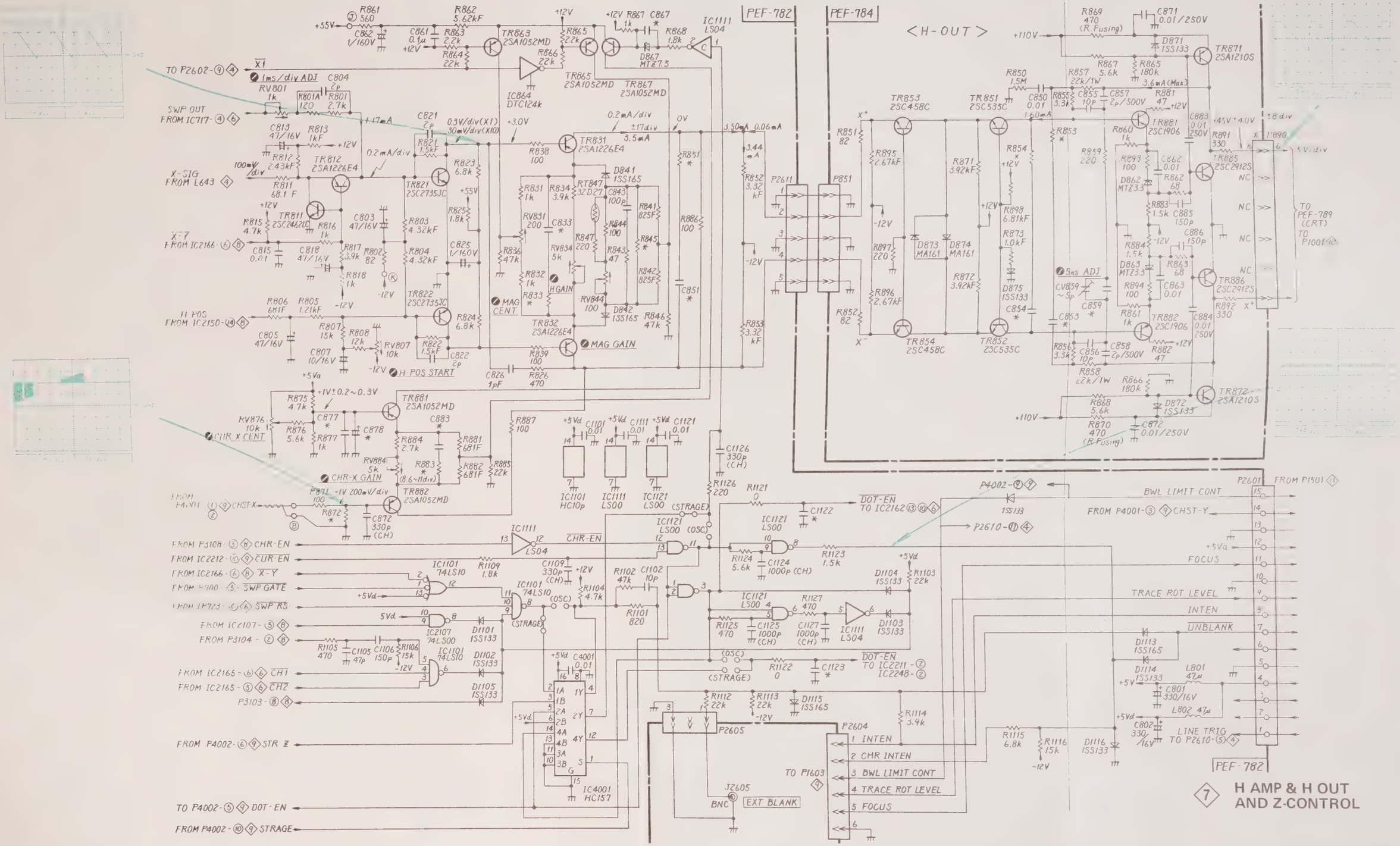
PEF-782
PEF-784
<H-OUT>
TO P2602-⑨④ XI
1ms/div ADJ
SWP OUT FROM IC717-④⑥
X-SIG FROM L643 ④
X-Y FROM IC2166-⑥⑧
H POS FROM IC2150-⑭⑧
TR863 2SA1052MD
TR865 2SA1052MD
TR867 2SA1052MD
IC864 DTC124k
IC1111 LS04
TR831 2SA1226E4
TR832 2SA1226E4
TR812 2SA1226E4
TR811 2SC2412K
TR821 2SC2735JC
TR822 2SC2735JC
TR881 2SA1052MD
TR882 2SA1052MD
MAG CENT
H GAIN
MAG GAIN
H-POS START
CHR-X CENT
CHR-X GAIN
TR853 2SC458C
TR854 2SC458C
TR851 2SC535C
TR852 2SC535C
TR871 2SA1210S
TR872 2SA1210S
TR881 2SC1906
TR882 2SC1906
TR885 2SC2912S
TR886 2SC2912S
5ms ADJ
TO (PEF-789 (CRT)
TO P1001/10
FROM P4001 ①⑨CHST-X
FROM P3108-③⑧CHR-EN
FROM IC2212-⑩⑨CUR-EN
FROM IC2166-⑥⑧X-Y
FROM IC2100-⑤SWP GATE
FROM IC2123-⑤⑥SWP RS
FROM IC2107-⑤⑧
FROM P3104-②⑧
FROM IC2165-⑤⑥CH1
FROM IC2165-⑤⑥CH2
P3103-⑧⑧
FROM P4002-⑥⑨STR Z
TO P4002-⑤⑨DOT-EN
FROM P4002-⑩⑨STRAGE
IC1101 74LS10
IC2107 74LS00
IC1101 74LS10
IC4001 HC157
IC1101 HC10p
IC1111 LS00
IC1121 LS00
IC1111 LS04
IC1121 LS00 (OSC)
DOT-EN TO IC2162⑬⑩⑥
P4002-⑨⑨ 1SS133
P2610-⑪④
FROM P1501①
BWL LIMIT CONT
FROM P4001-③⑨CHST-Y
FOCUS
TRACE ROT LEVEL
INTEN
UNBLANK
LINE TRIG TO P2610-⑤④
DOT-EN TO IC2211-②
IC2248-②
P2604
1 INTEN
2 CHR INTEN
3 BWL LIMIT CONT
4 TRACE ROT LEVEL
5 FOCUS
TO P1603⑨
J2605 BNC
EXT BLANK
P2611
P851
P2601
P1890
PEF-782
7 H AMP & H OUT AND Z-CONTROL

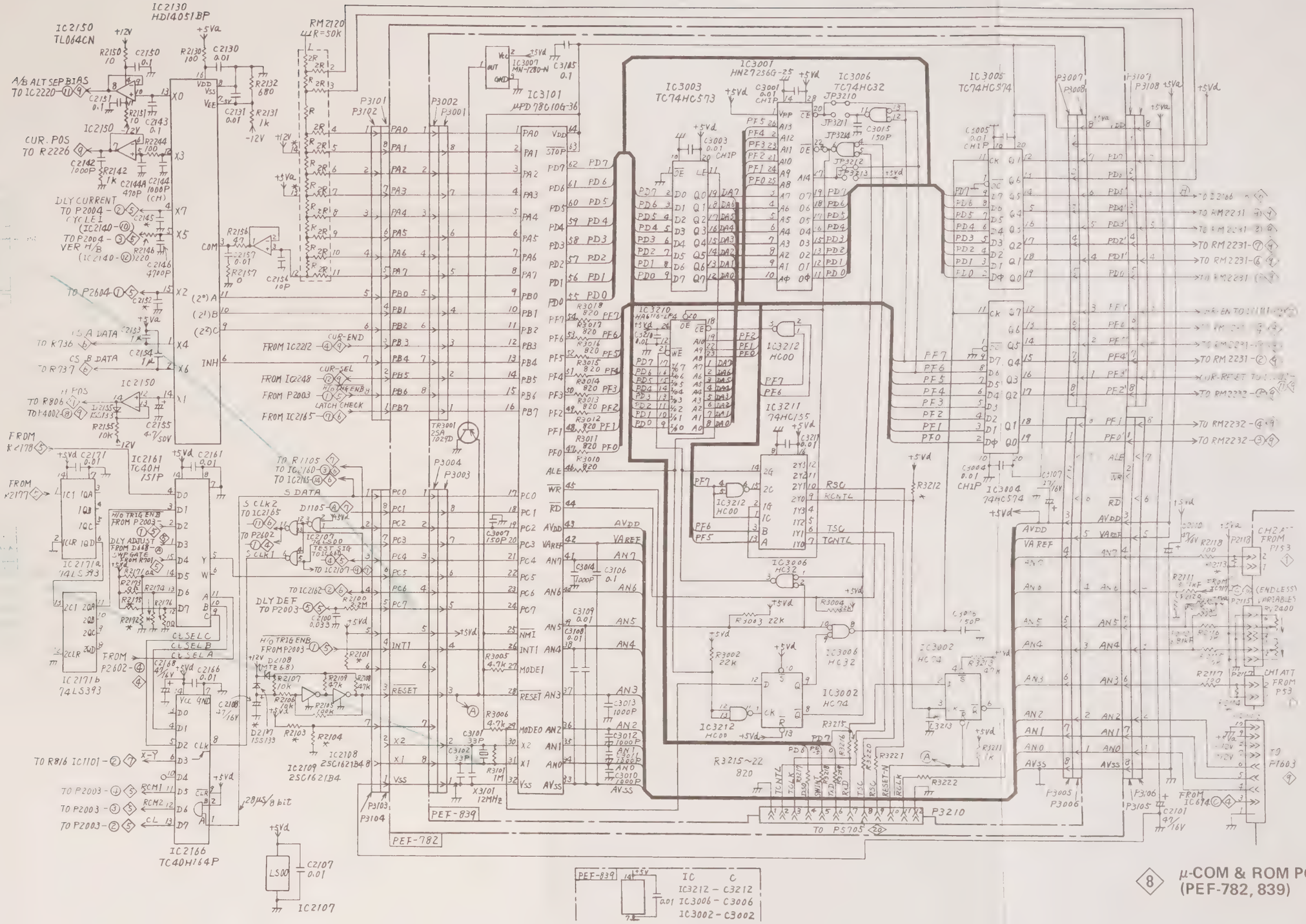

8 μ-COM & ROM PG (PEF-782, 839)

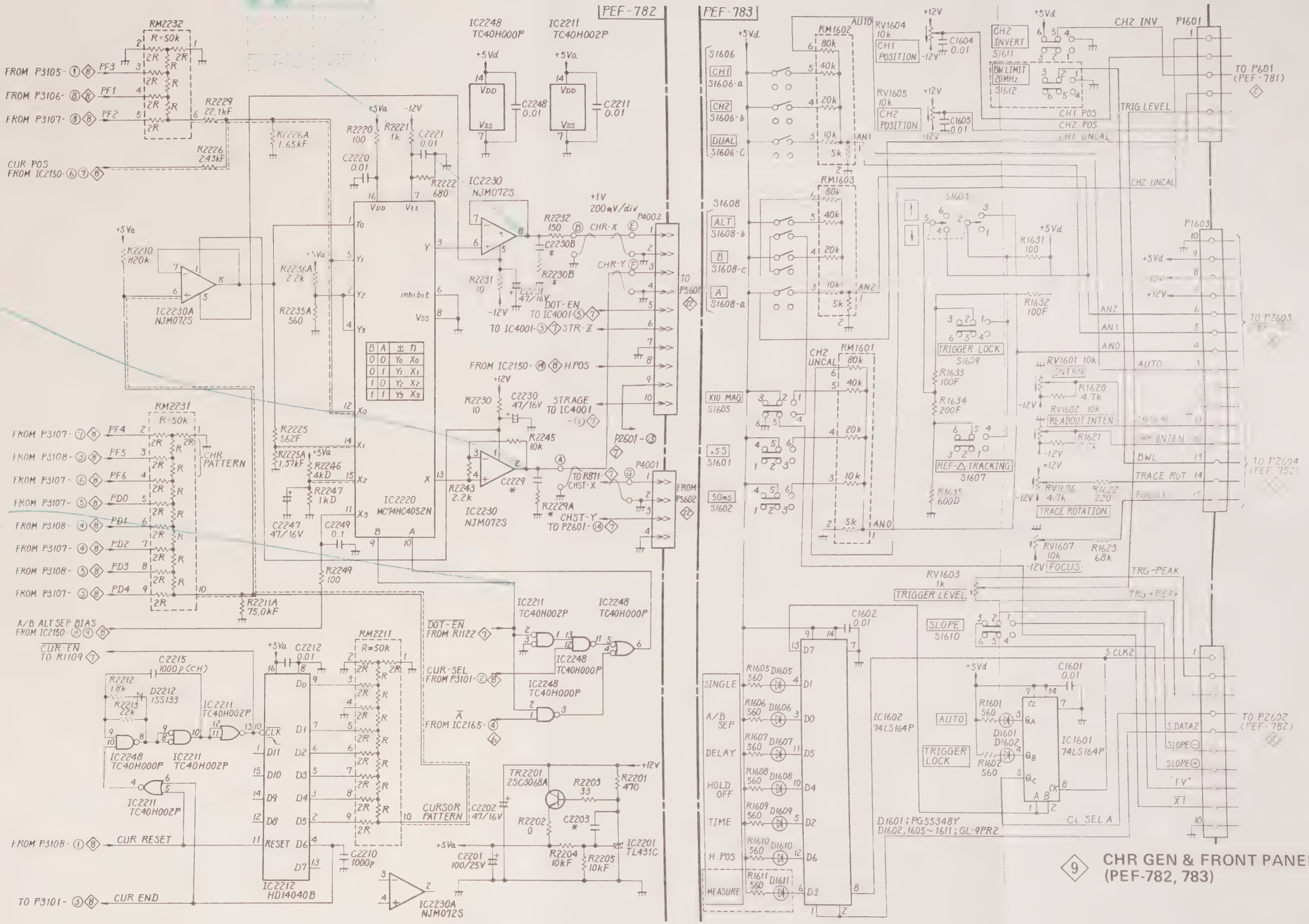

9 CHR GEN & FRONT PANEL (PEF-782, 783)

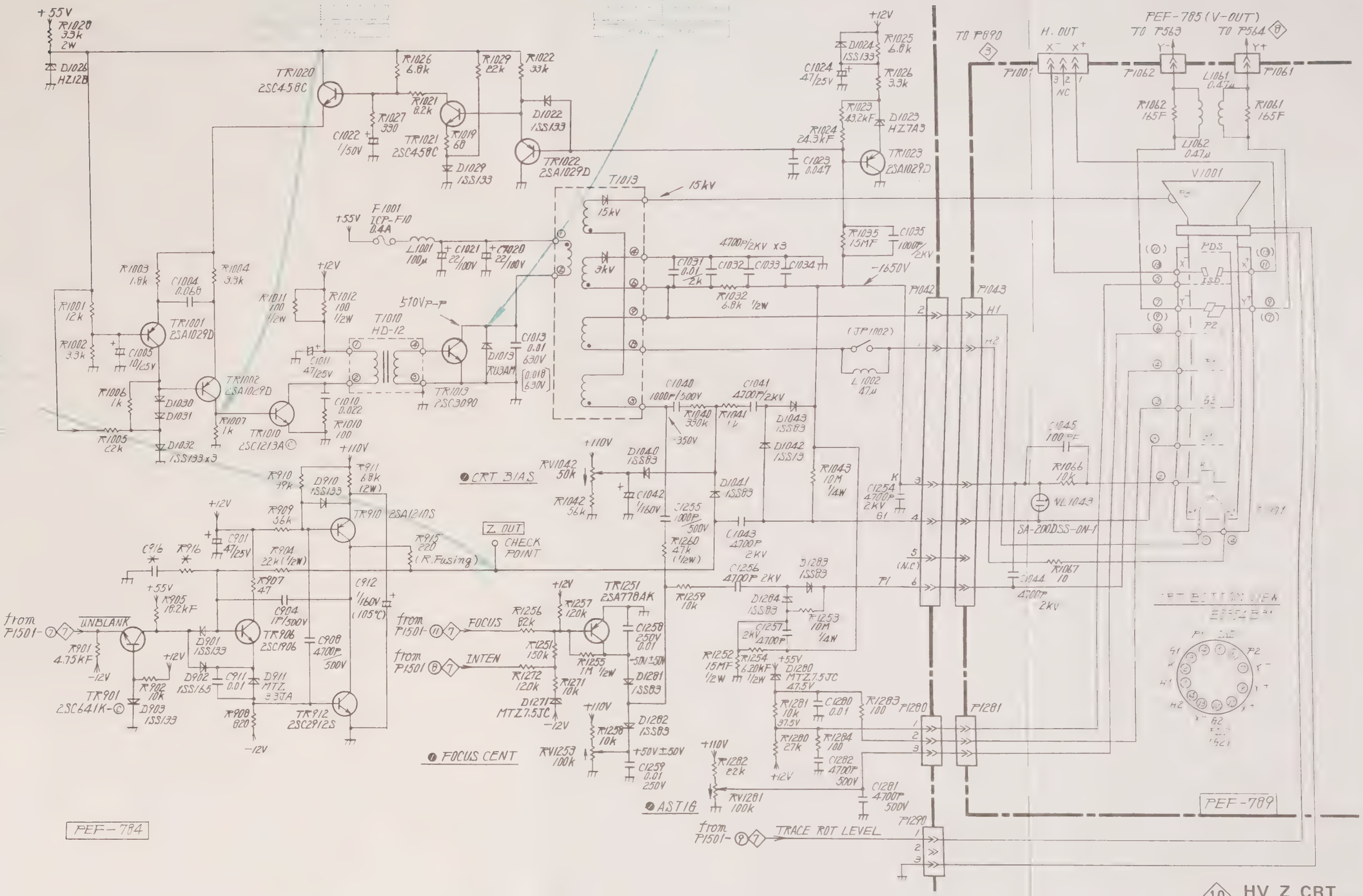

10 HV, Z, CRT (PEF-784, 789)

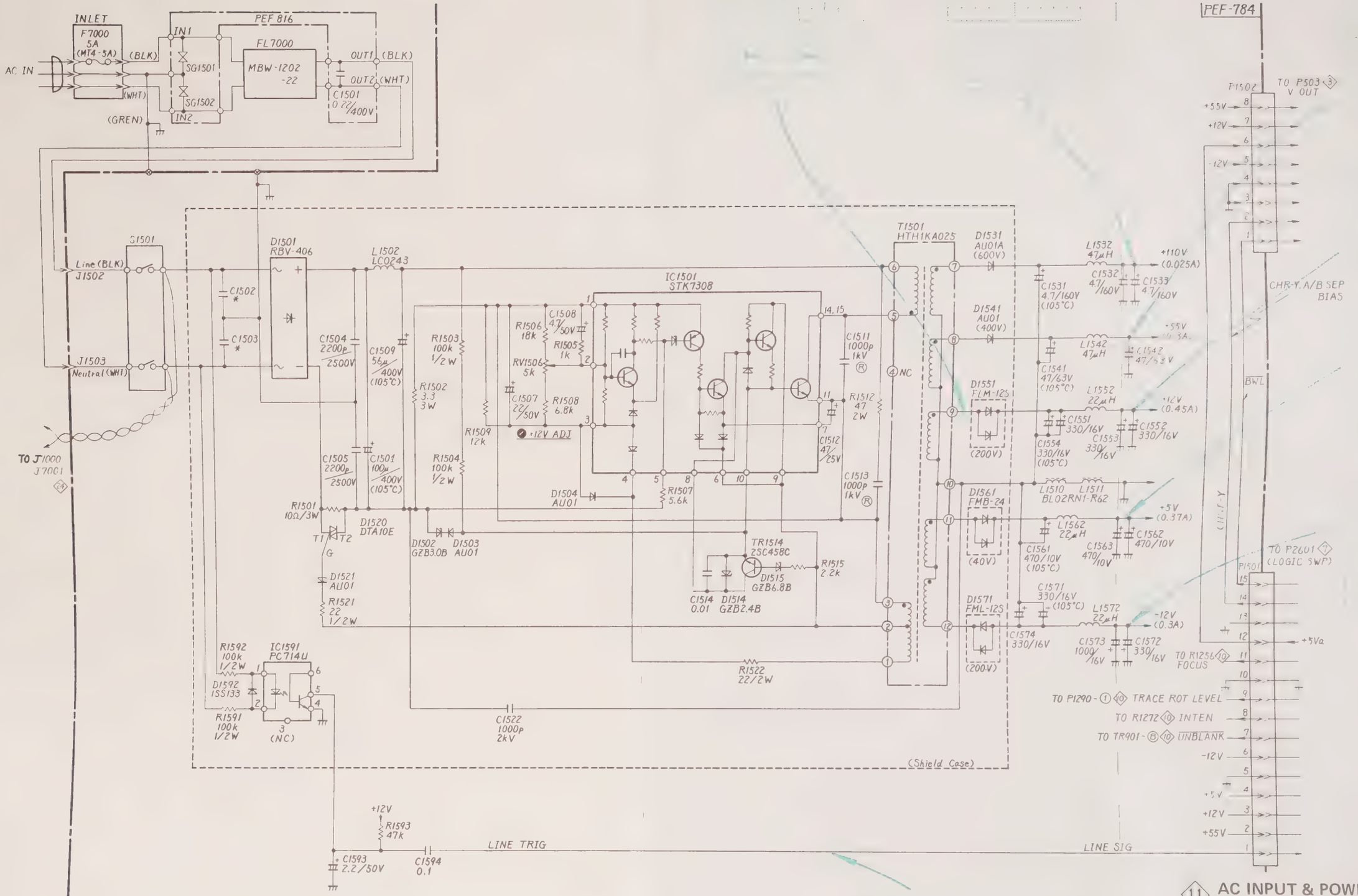

11 AC INPUT & POWER 1 (PEF-784)

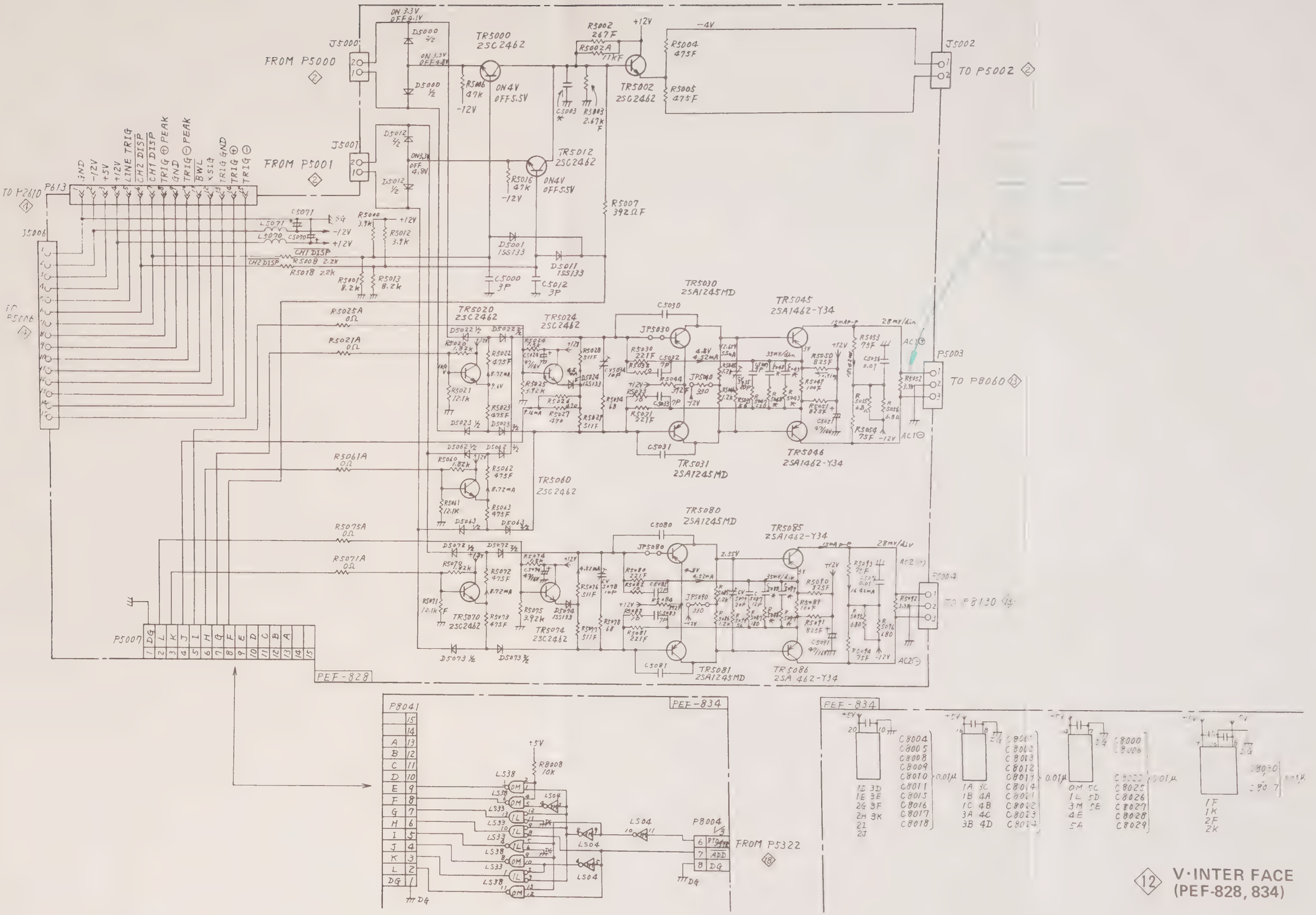

12 V·INTER FACE (PEF-828, 834)

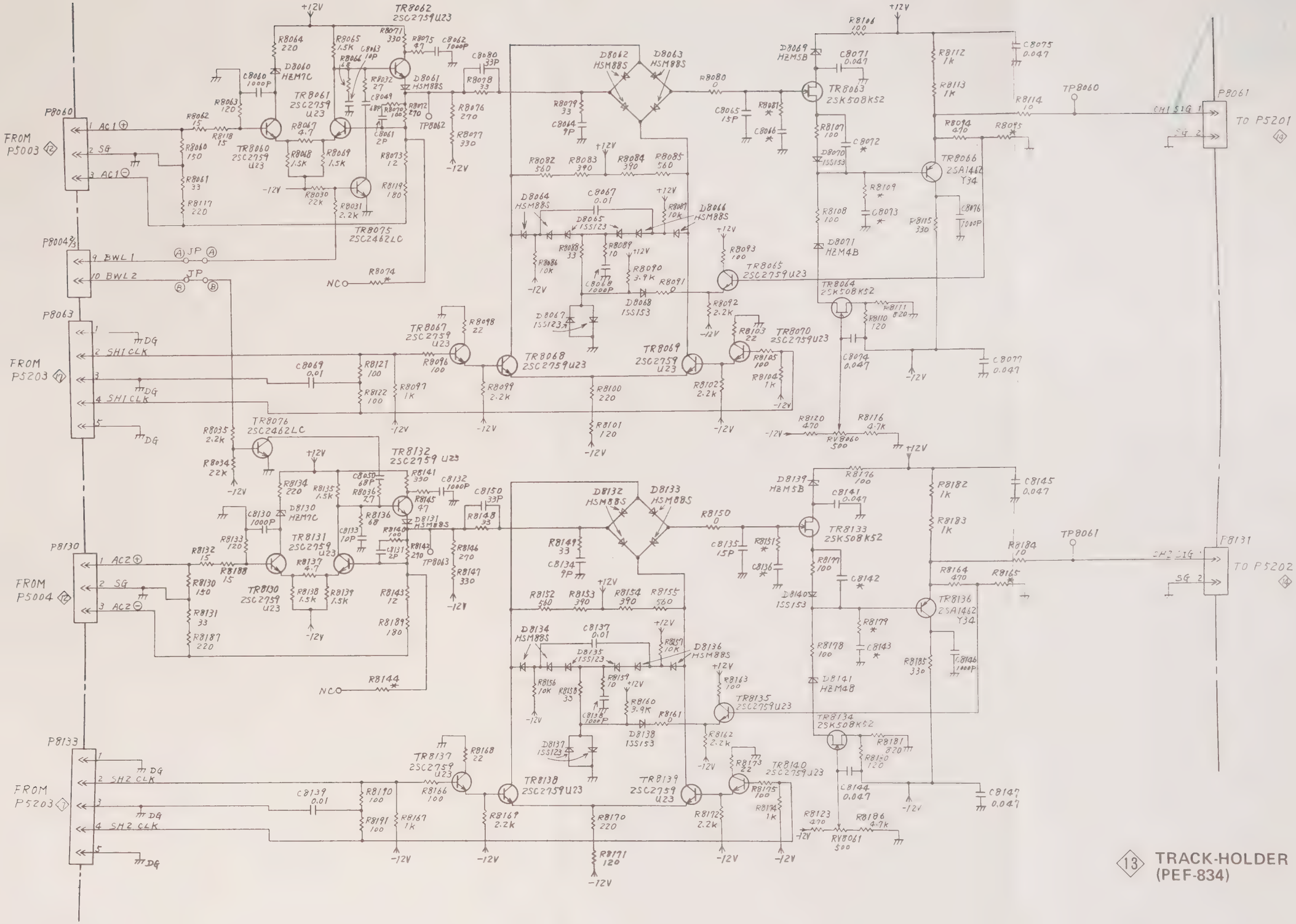

13 TRACK-HOLDER (PEF-834)

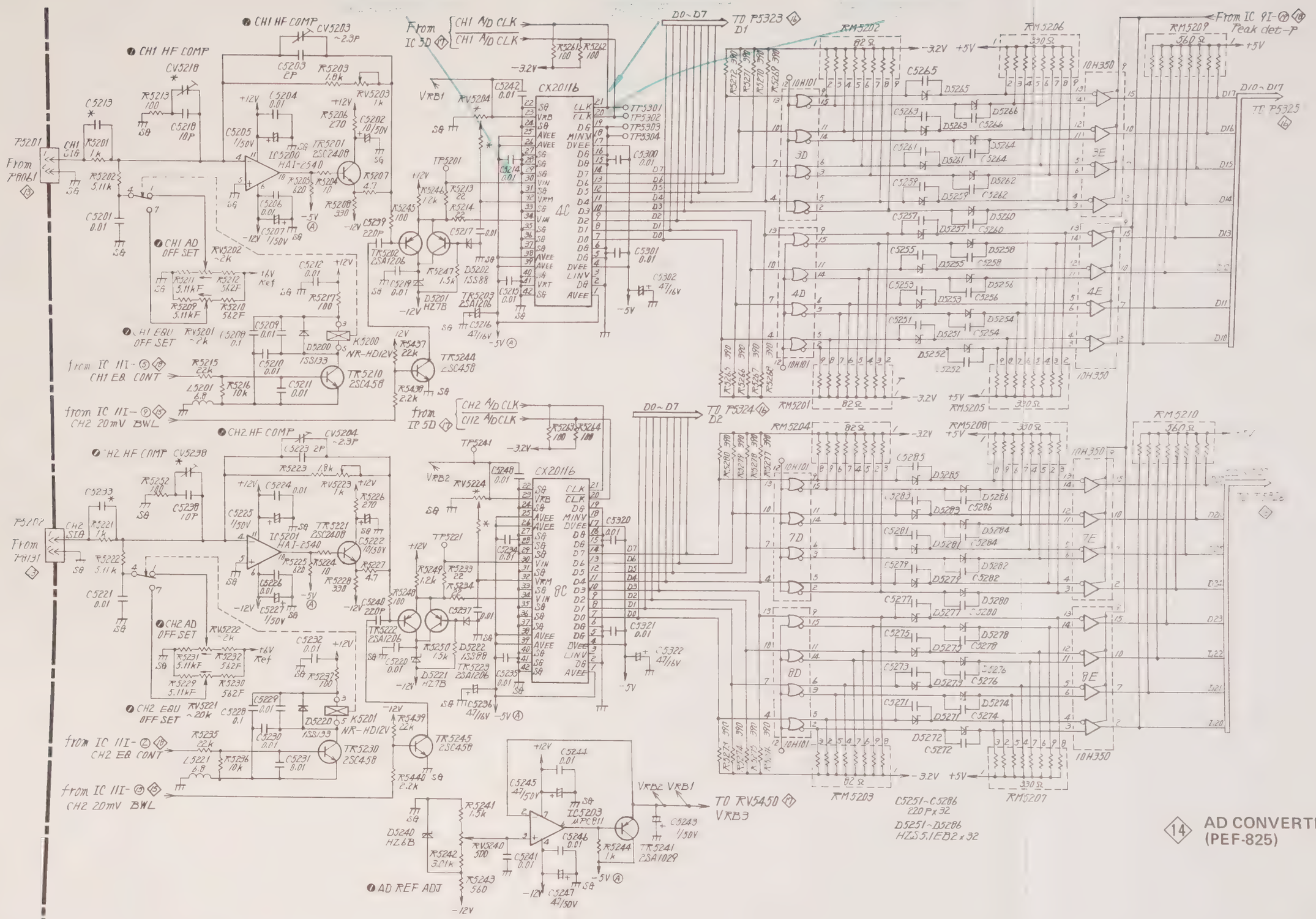

⑭ AD CONVERTER (PEF-825)

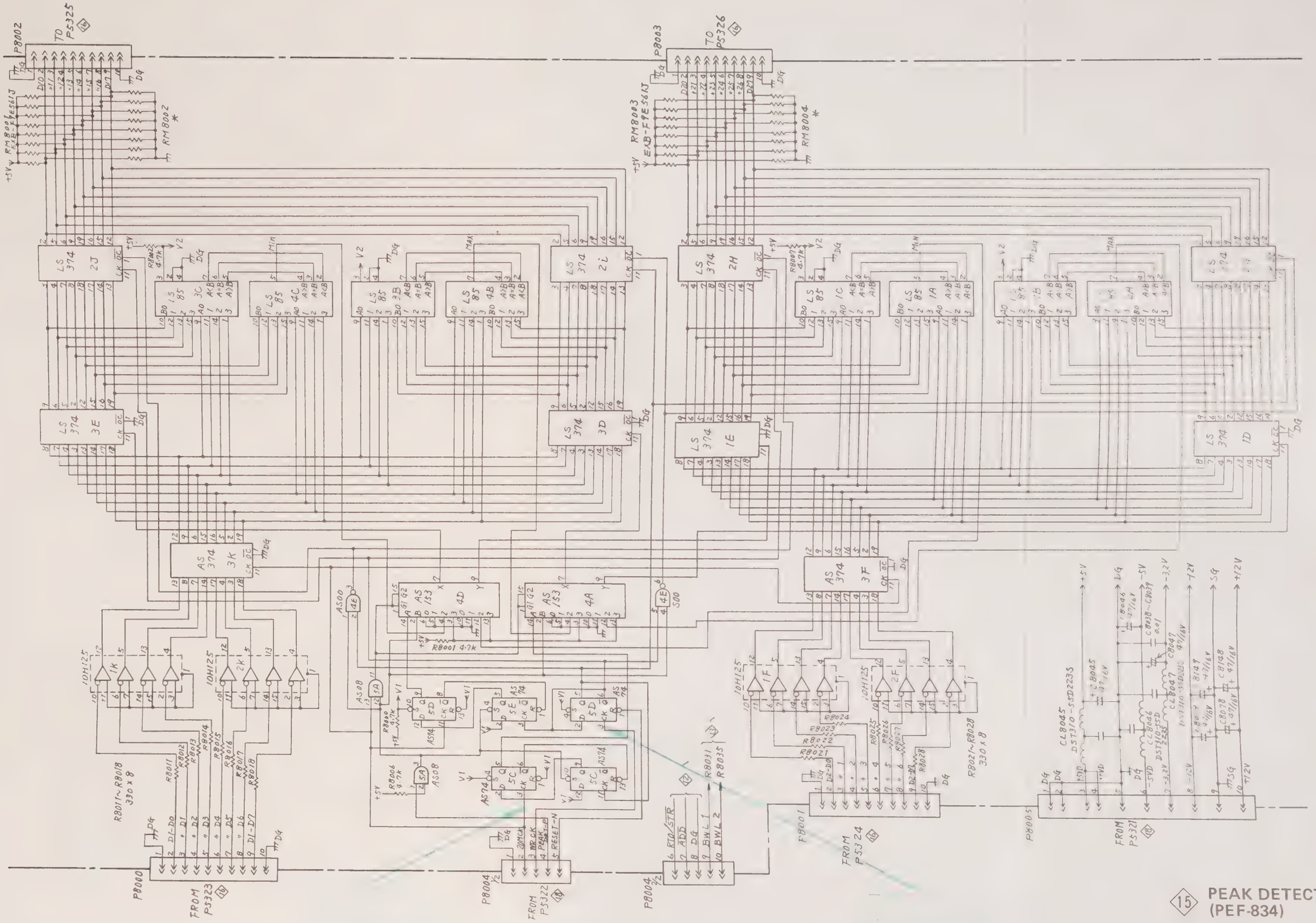

15 PEAK DETECTOR (PEF-834)

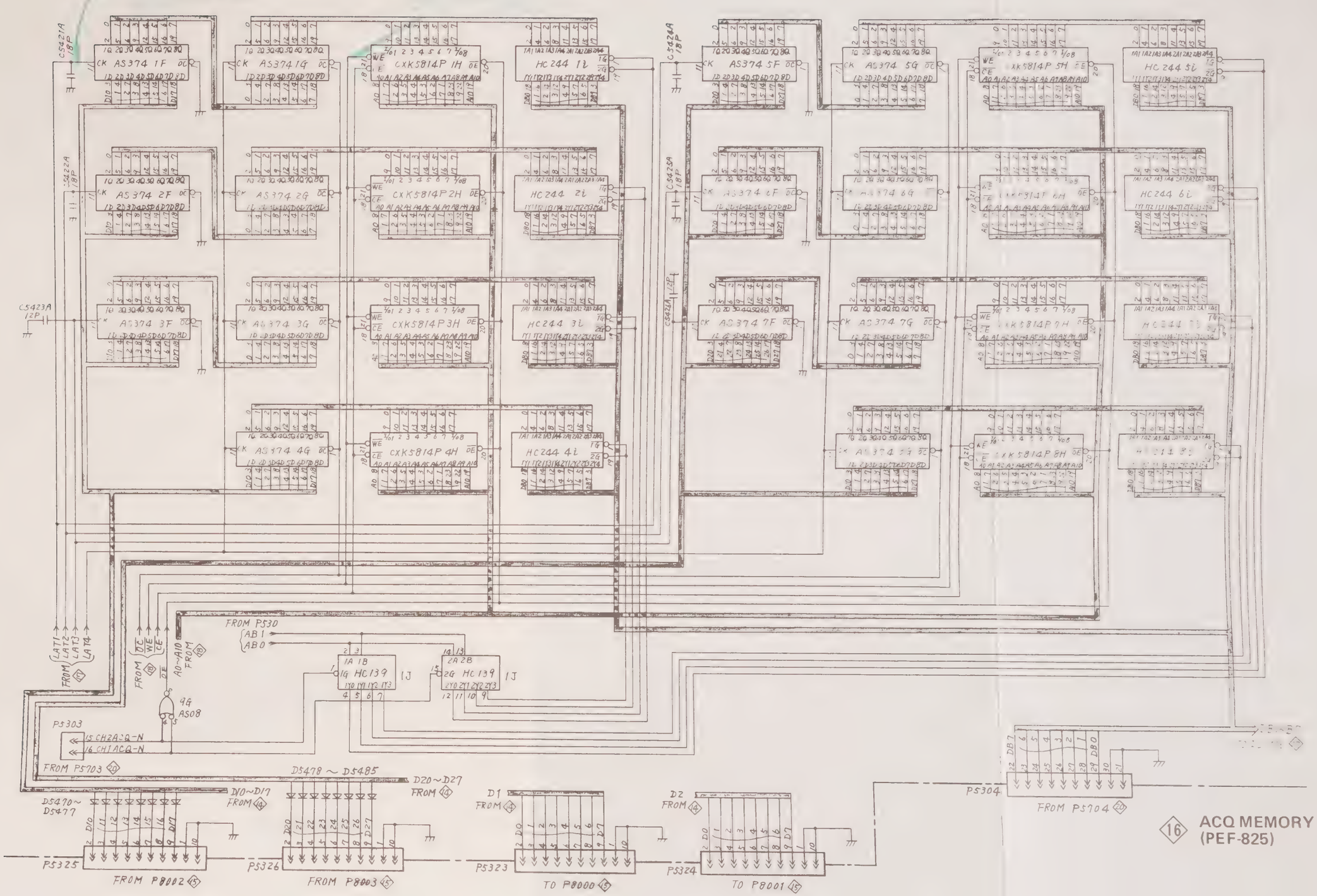

16 ACQ MEMORY (PEF-825)

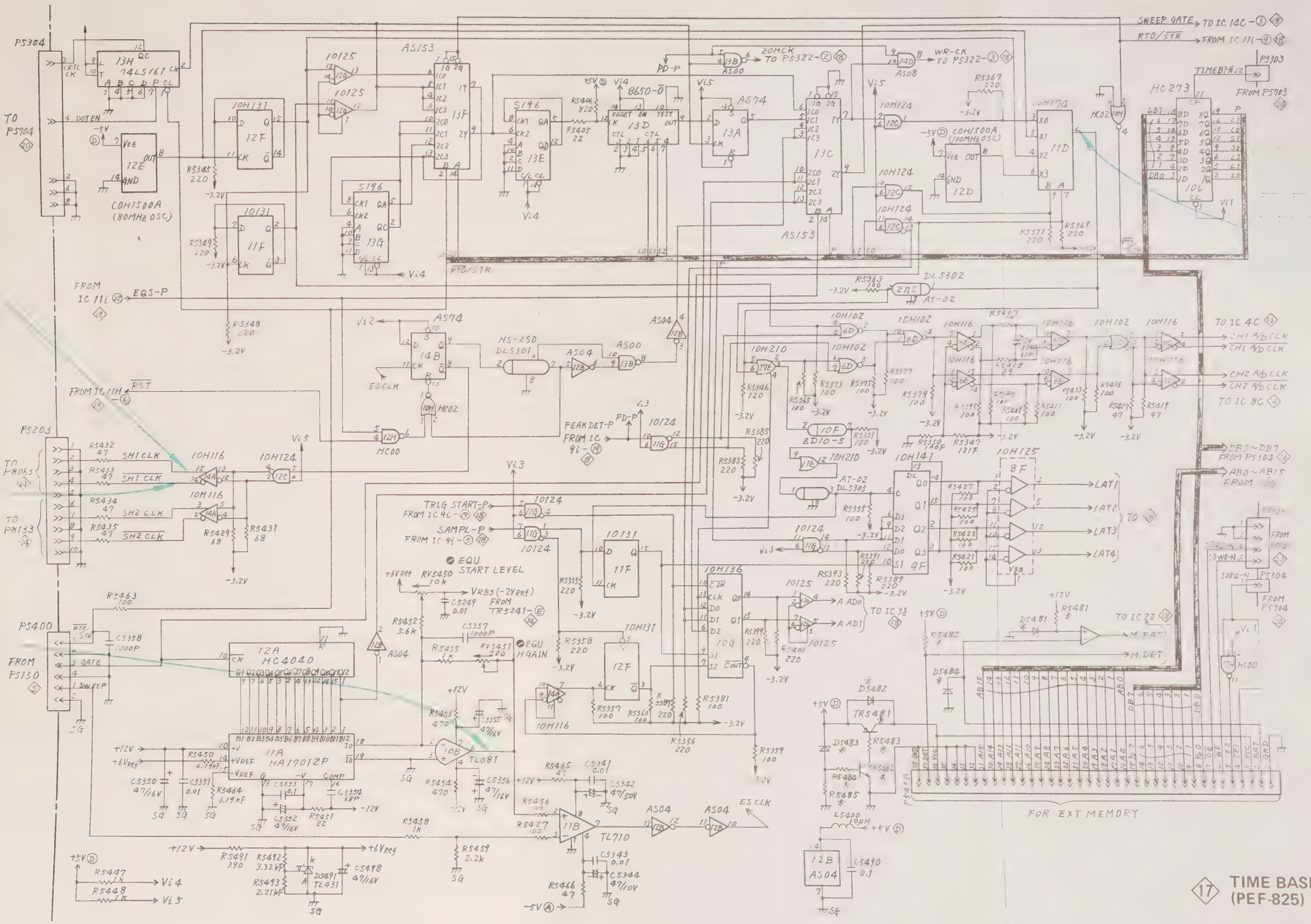
P5304
TO P5704
13H 74LS161
12E COH1500A (80MHz OSC)
12F
11F
10131
10125
AS153
13F
S196
13E
13G
8650-0
13D
AS74
13A
13C
11D
12D
HC273
10l
TIMEBIT
P5303
FROM P5703
SWEEP GATE → TO IC 14C
RTO/STR → FROM IC 11i
20MCK TO P5322-②
WR-CK TO P5322-③
COH1500A (100MHz OSC)
DL5302
AT-02
FROM IC 11i EQS-P
RTO/STR
TO IC 4C
CH1 A/D CLK
CH2 A/D CLK
TO IC 8C
DB0~DB7 FROM P5304
AB0~AB15 FROM
LAT1
LAT2
LAT3
LAT4
TO IC 6J
FROM IC 11H RST
P5203
TO P8063
TO P8133
SH1 CLK
SH1 CLK
SH2 CLK
SH2 CLK
PEAK DET-P FROM IC 9i
SAMPL-P FROM IC 9i
TRIG START-P FROM IC 9i
EQU START LEVEL
EQU H GAIN
VRB3 (-2VRef) FROM TR5241
P5400
FROM P5150
GATE
SWEEP
1ZA HC4040
11A HA17012P
10B TL081
11B TL710
DS491 TL431
ES CLK
TO IC 14C
TO IC 3F
TO IC 2J
M DAT
M DET
DS481
DS482
TR5481
DS483
DS484
P5410
FOR EXT MEMORY
12B AS04
LS400 10μH
C5490 0.1
17 TIME BASE (PEF-825)

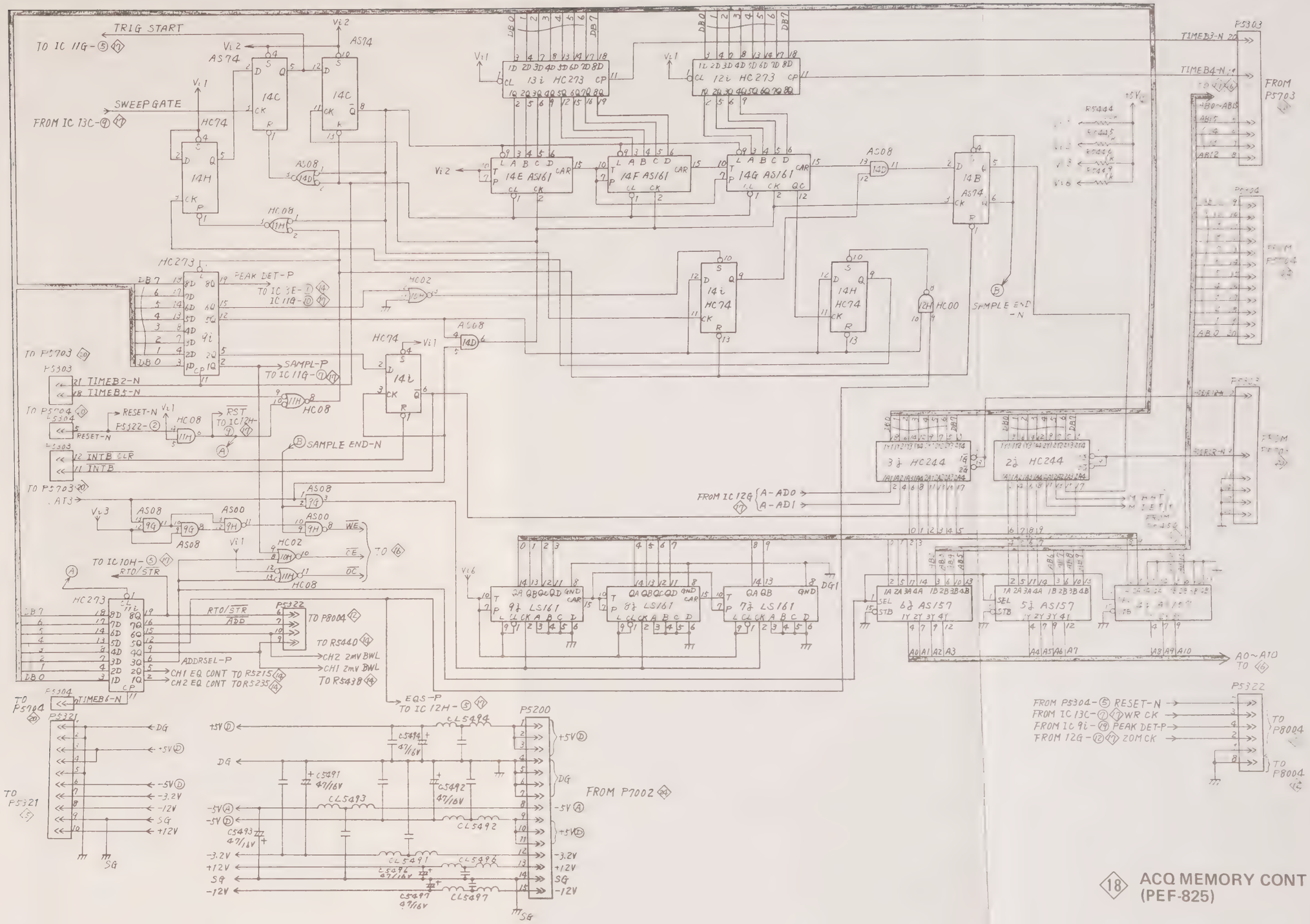

18 ACQ MEMORY CONT (PEF-825)

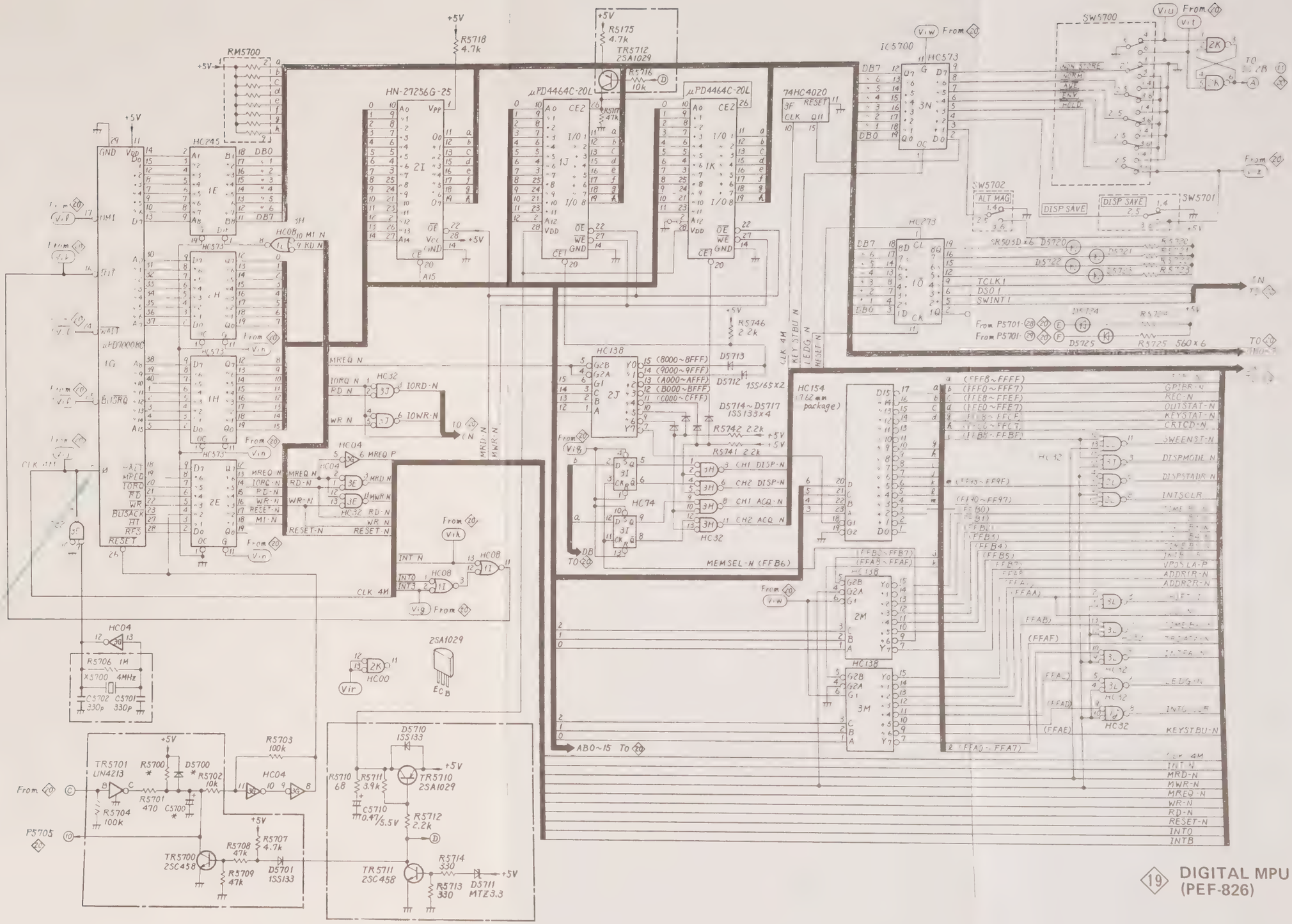

19 DIGITAL MPU (PEF-826)

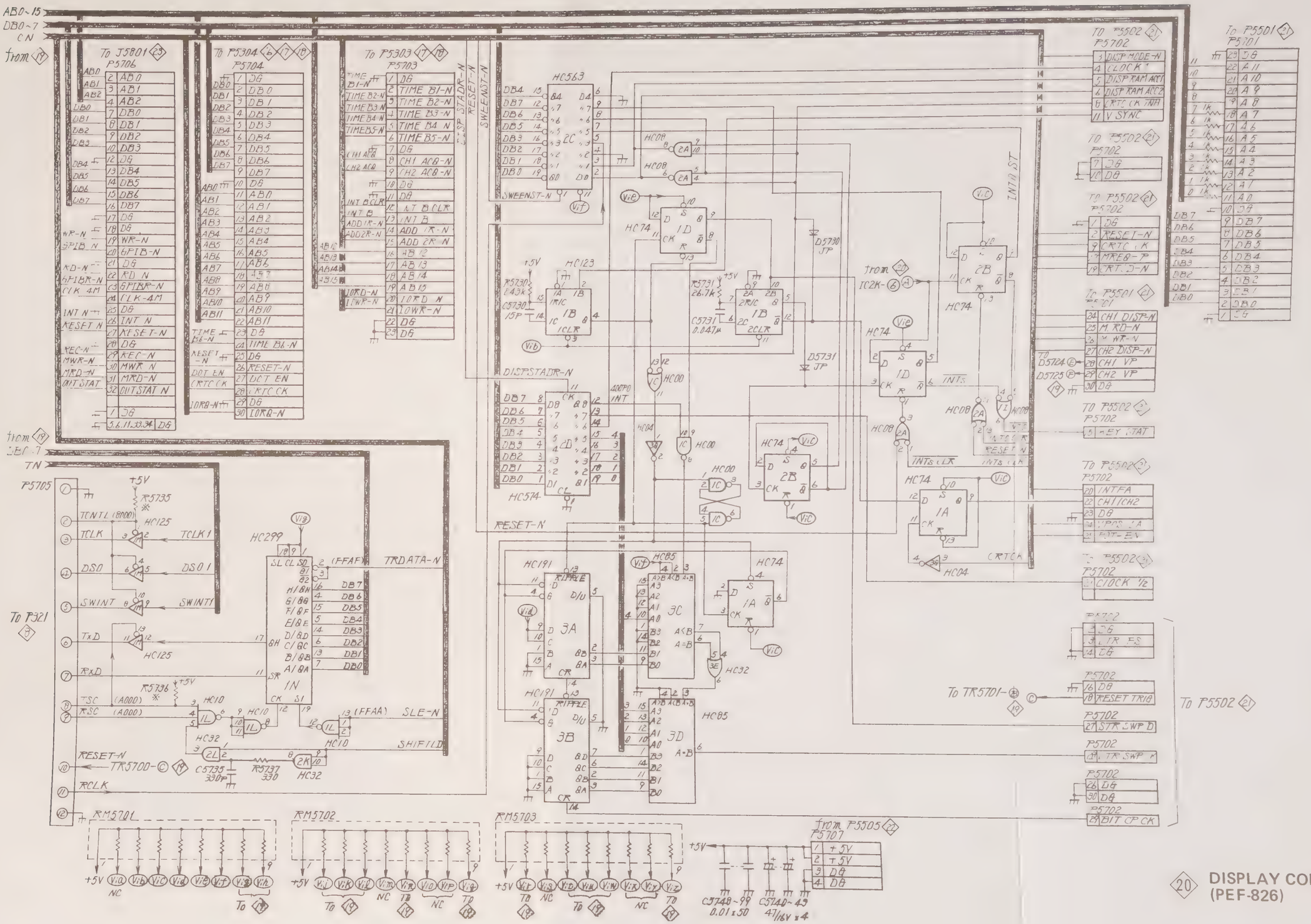

20 DISPLAY CONT (PEF-826)

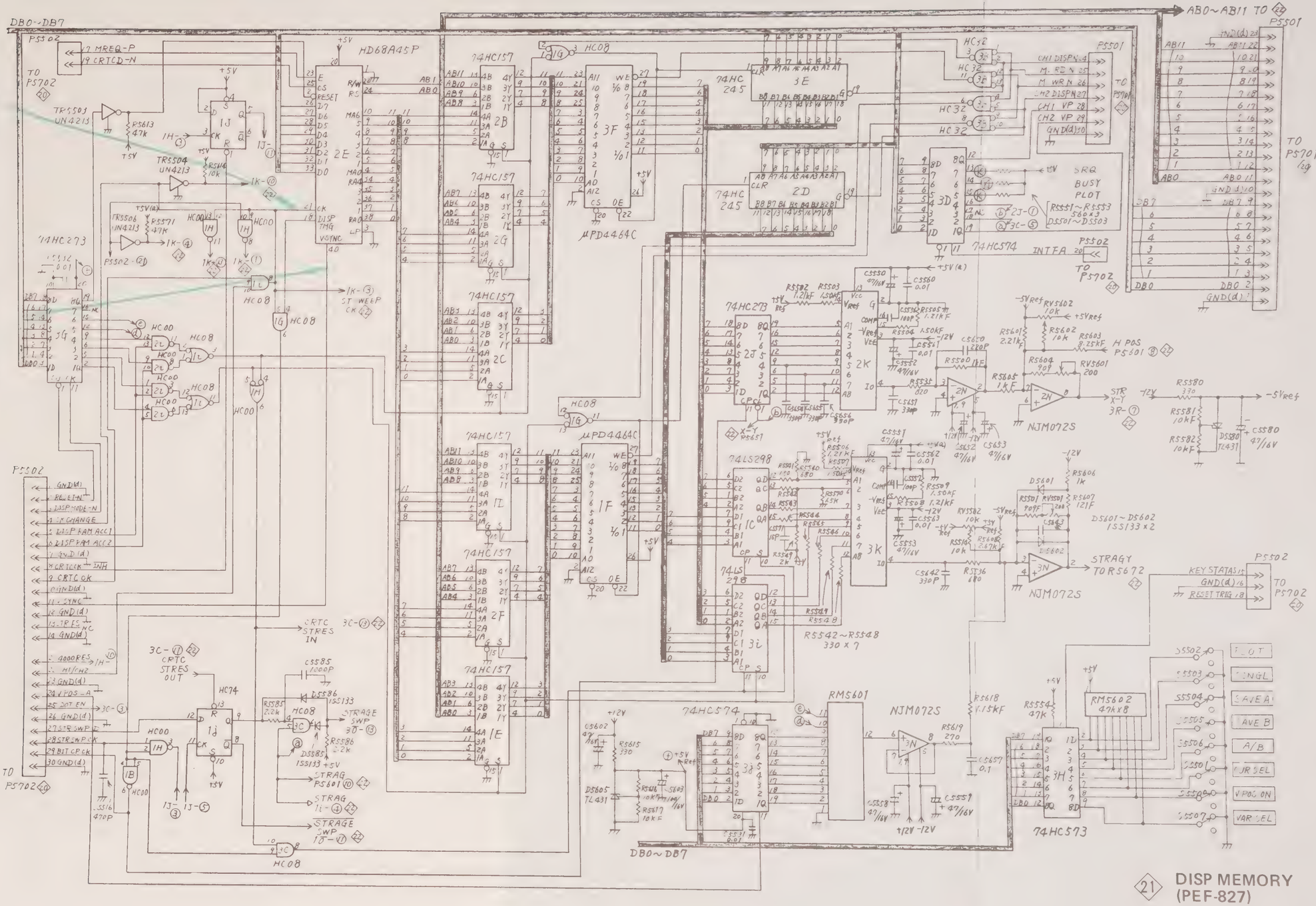

21 DISP MEMORY (PEF-827)

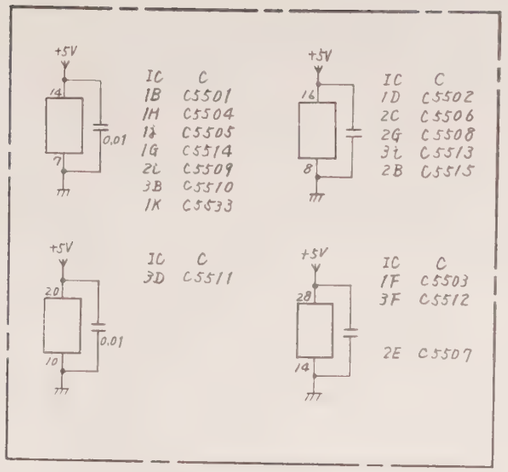

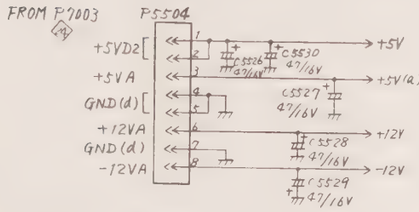

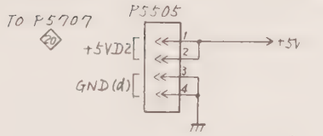

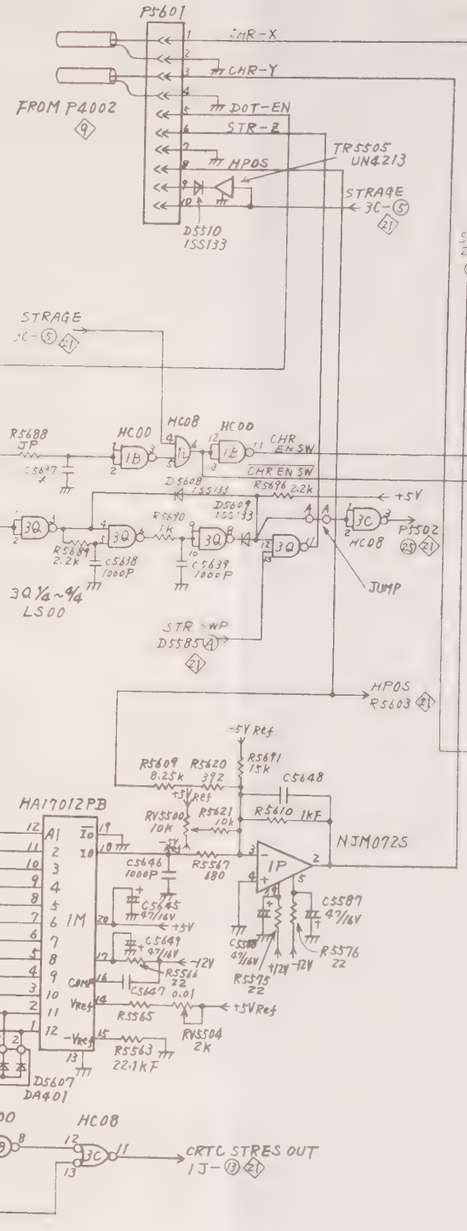

22 DISP SIGNAL SW (PEF-827)

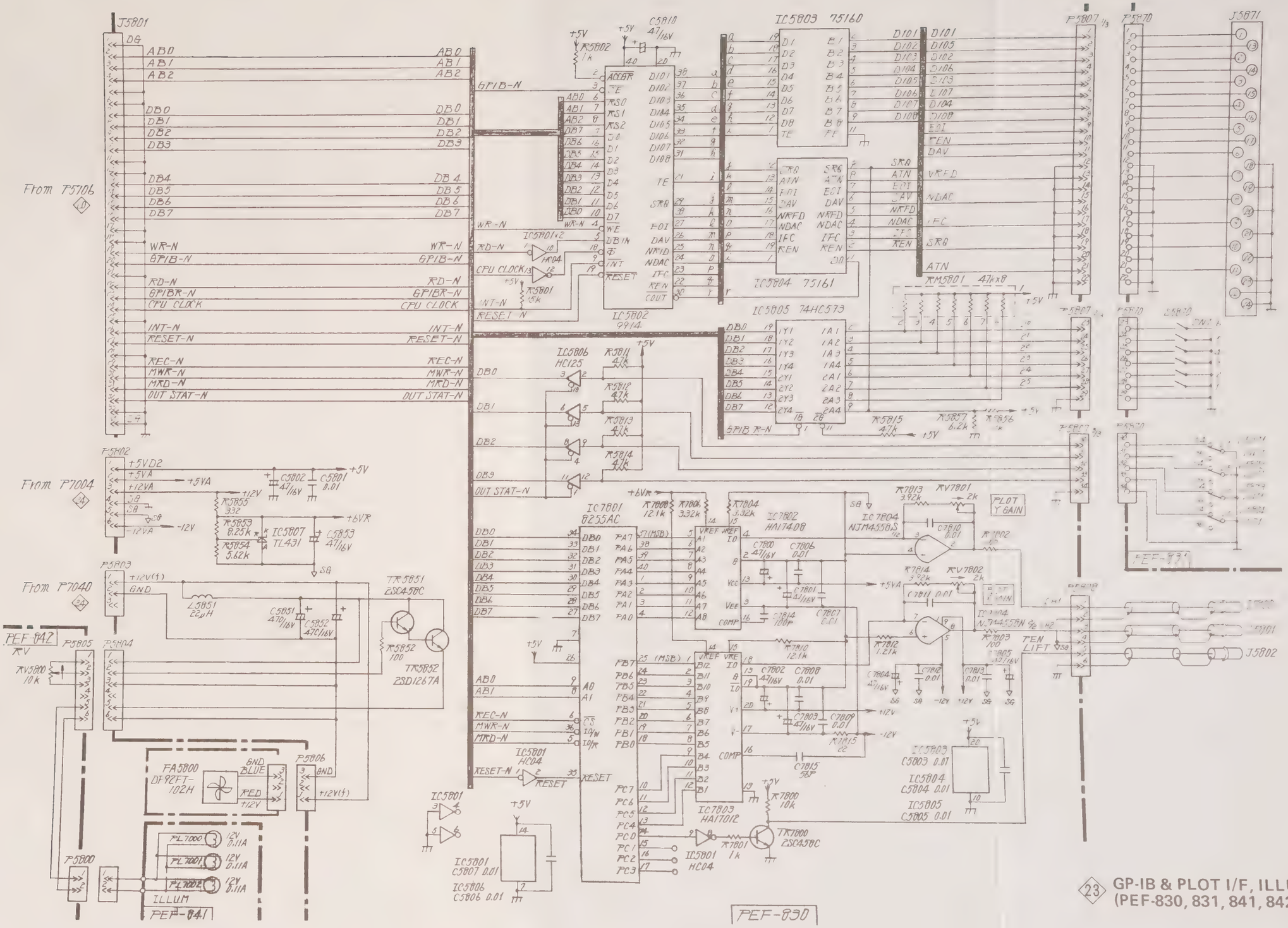

23 GP-IB & PLOT I/F, ILLUMI (PEF-830, 831, 841, 842)

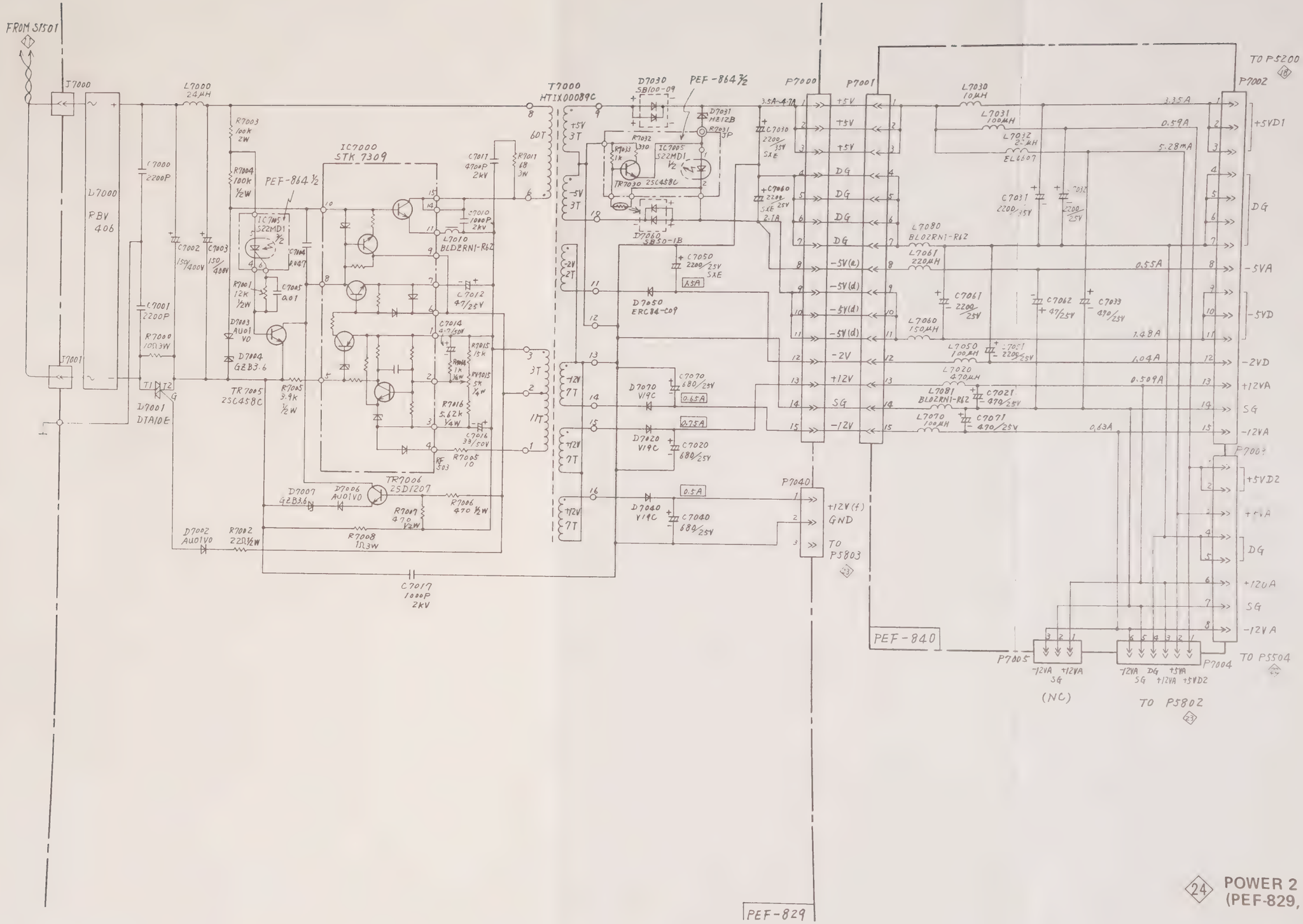

24 POWER 2
(PEF-829, 840)

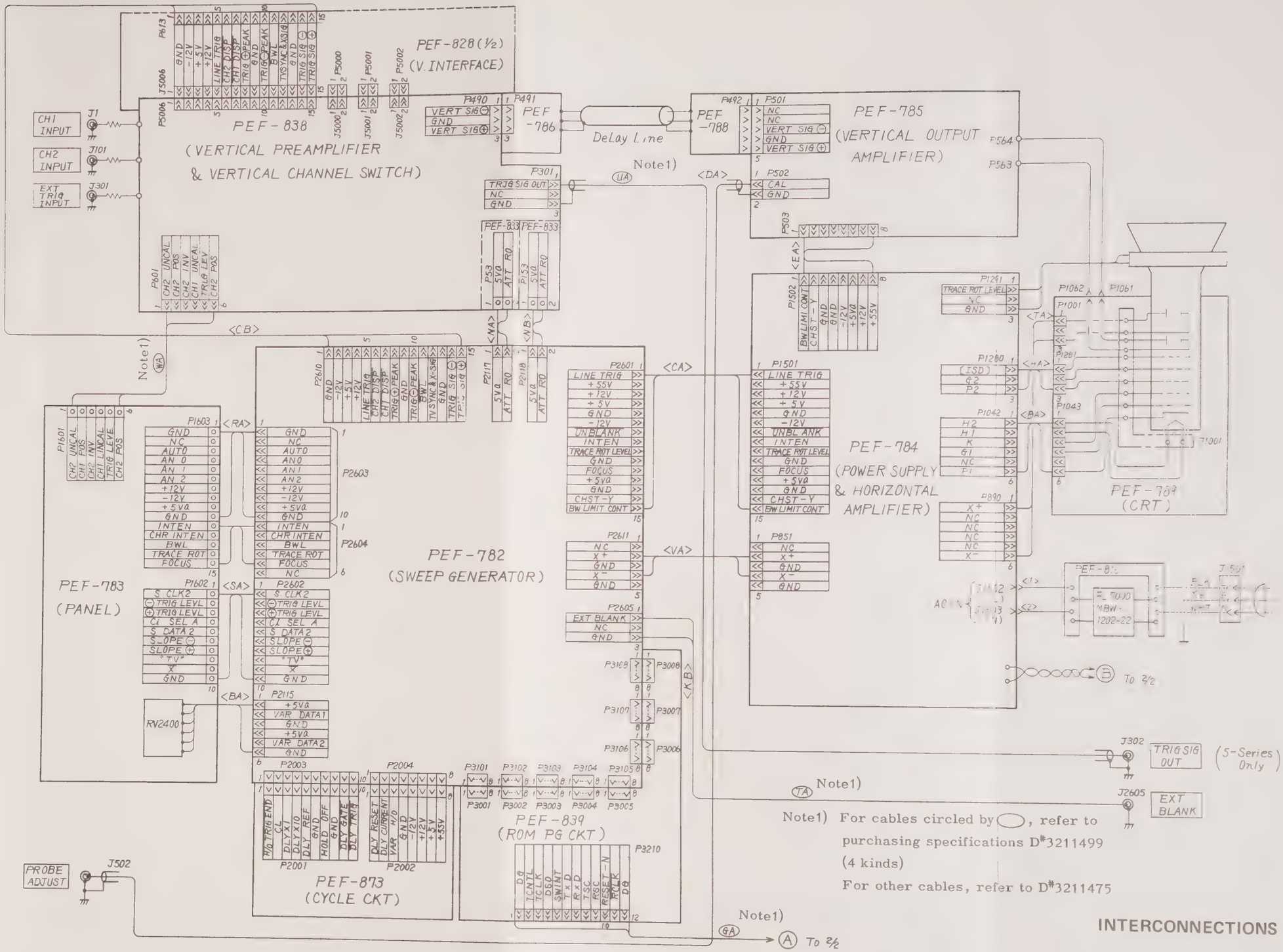

Note1) For cables circled by ◯, refer to purchasing specifications D*3211499 (4 kinds)
For other cables, refer to D*3211475

INTERCONNECTIONS (1/2)

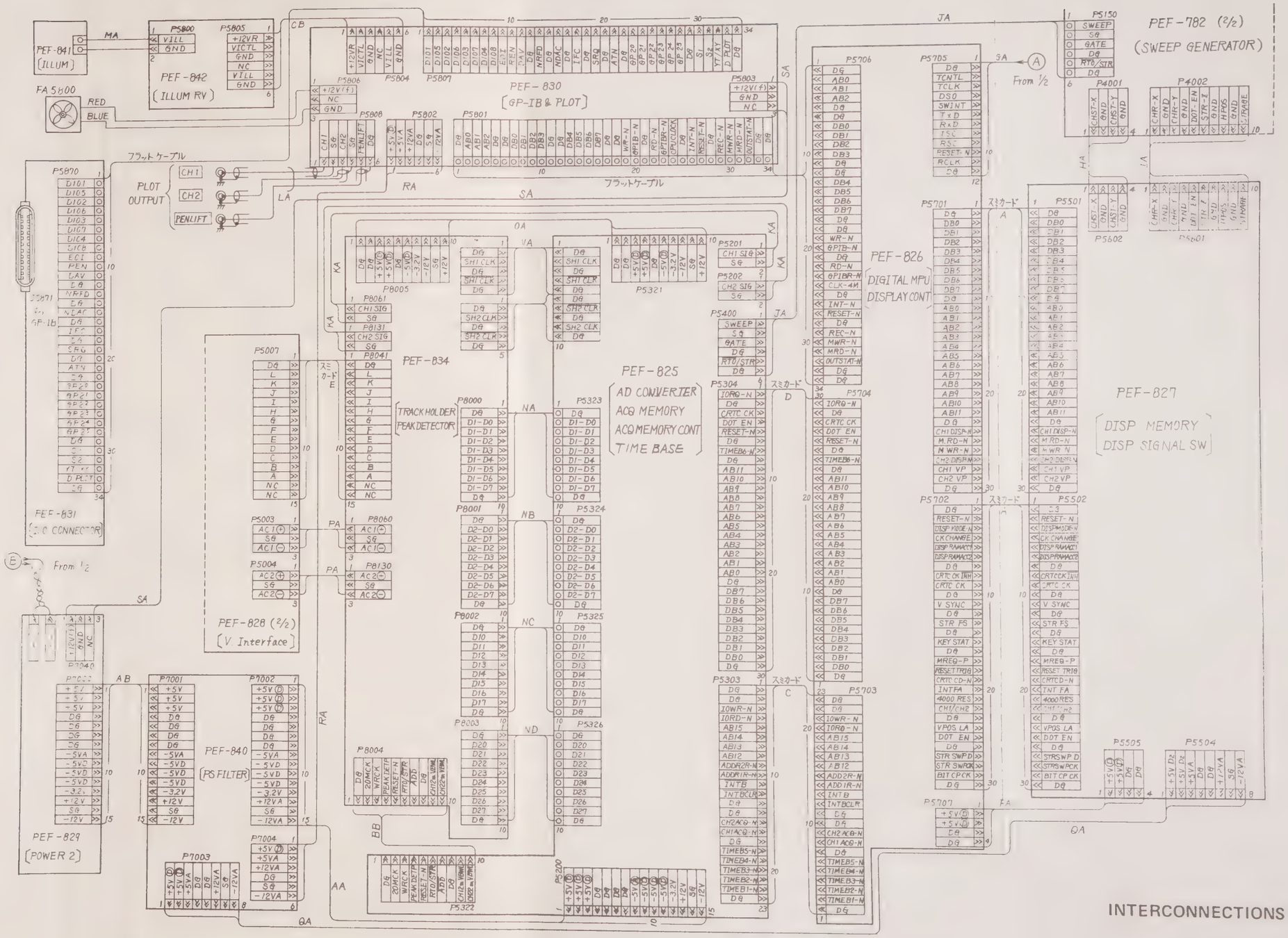
PEF-841 (ILLUM)
PEF-842 (ILLUM RV)
FA5800
PEF-830 (GP-IB & PLOT)
PEF-782 (2/2) (SWEEP GENERATOR)
PEF-826 DIGITAL MPU DISPLAY CONT
PEF-827 DISP MEMORY DISP SIGNAL SW
PEF-825 AD CONVERTER ACQ MEMORY ACQ MEMORY CONT TIME BASE
PEF-834
PEF-840 (PS FILTER)
PEF-828 (2/2) (V. Interface)
PEF-829 (POWER 2)
PEF-831 (I/O CONNECTOR)
PLOT OUTPUT
TRACK HOLDER PEAK DETECTOR
From 1/2
From 1/2
フラットケーブル
フラットケーブル
スミカード A
スミカード C
スミカード D
スミカード E
INTERCONNECTIONS (2/2)

HANICAL PARTS LIST AND EXPLODED VIEW

CODE	DESCRIPTION	Q'TY
03 A	Cover Assy Top	1
12 A	Cover Up	1
08 A	Insulater	1
05 A	Shield Case Assy	1
53 A	Shield Case	1
54 A	Insulater	1
17 A	Frame Assy	1
30 A	Name Plate	1
2 A	Flame	1
61 A	Shield Band Assy	1
68 C	Shield Band	1
52 A	Label	1
13 A	Cover Bottom	1
02 AA	Chassis Front	1
70 AA	Chassis Rear	1
71 AA	Chassis C	1
50 A	Bracket	1
69 AA	Shield Case	1
37 A	CRT Band	1
99 A	CRT Band	1
28 A	Bracket	1
71 A	Bracket HIC	1
63 A	Shield Case	1
76 A	Nut Plate	2
35 A	Plate Earth	1
42 A	Bracket	1
77 A	Spacer BNC	3
29 A	Spacer	7
29 B	Spacer	2
33 A	Washer	1
79 A	Spring	1
32 A	Panel Front	1
61 A	Panel Rear	1
45 A	Filter	1
02 A	Handle	1
55 B	Ruber	2
43 A	Ruber	2
67 C	Ruber	1
17 C	Foot Rear	4
87 A	Foot Bottom	4
87 A	Button	14
45 A	LED Holder	1
25 A	Knob	1
47 A	Cap	1
39 AA	Knob-PW	1
50 AA	Knob-L	2
24 H	Knob-S18B	5
22 F	Knob-ATS	2
24 J	Knob-S18B	2
76 A	Stopper Handle	2
81 C	Bracket, IC	1
32 A	Plate Earth	1
62 AA	Chassis L	1
50 D	Knob-M	1
05 A	Shield Plate	1
55 B	Saddle	2
45 B	Guide Knob	4
87 A	Short Ring	1
85 A	Heat Think	1

SYMBOL	PART CODE	DESCRIPTION	Q'TY
81	8484995 AA	Heat Think	1
83	8485001 A	V-PRE Shield (1)	1
84	8485015 A	V-PRE Shield (2)	1
85	8485003 A	V-PRE Earth (1)	2
86	8485004 A	V-PRE Earth (2)	1
87	8485005 A	V-PRE Earth (3)	2
89	8485006 A	Earth Plate (1)	1
90	8485007 A	Earth Plate (2)	1
92	8472331 A	Clip	2
96	8487186 A	Heat Think	1
97	8487166 A	Heat Think	1
98	8427119 B	Cap	1
301	XCA7306	Screw Flat 3x6	26
302	XCA7410	Screw Flat 4x10	4
303	8340167 M	Screw Sems 3x6	3
305	XCA0661	Screw Sems 3x8	26
306	8340167 C	Screw Sems 4x20	4
307	XCA6205	Screw 2x5	8
308	XCA6306	Screw 3x6	3
309	XCA6308	Screw 3x8	24
310	XCA6408	Screw 4x8	1
311	XCA1818	Screw Black 3x8	3
312	XCA6316	Screw 3x16	6
313	XCA6310	Screw 3x10	1
315	XCA1881	Washer Spring	1

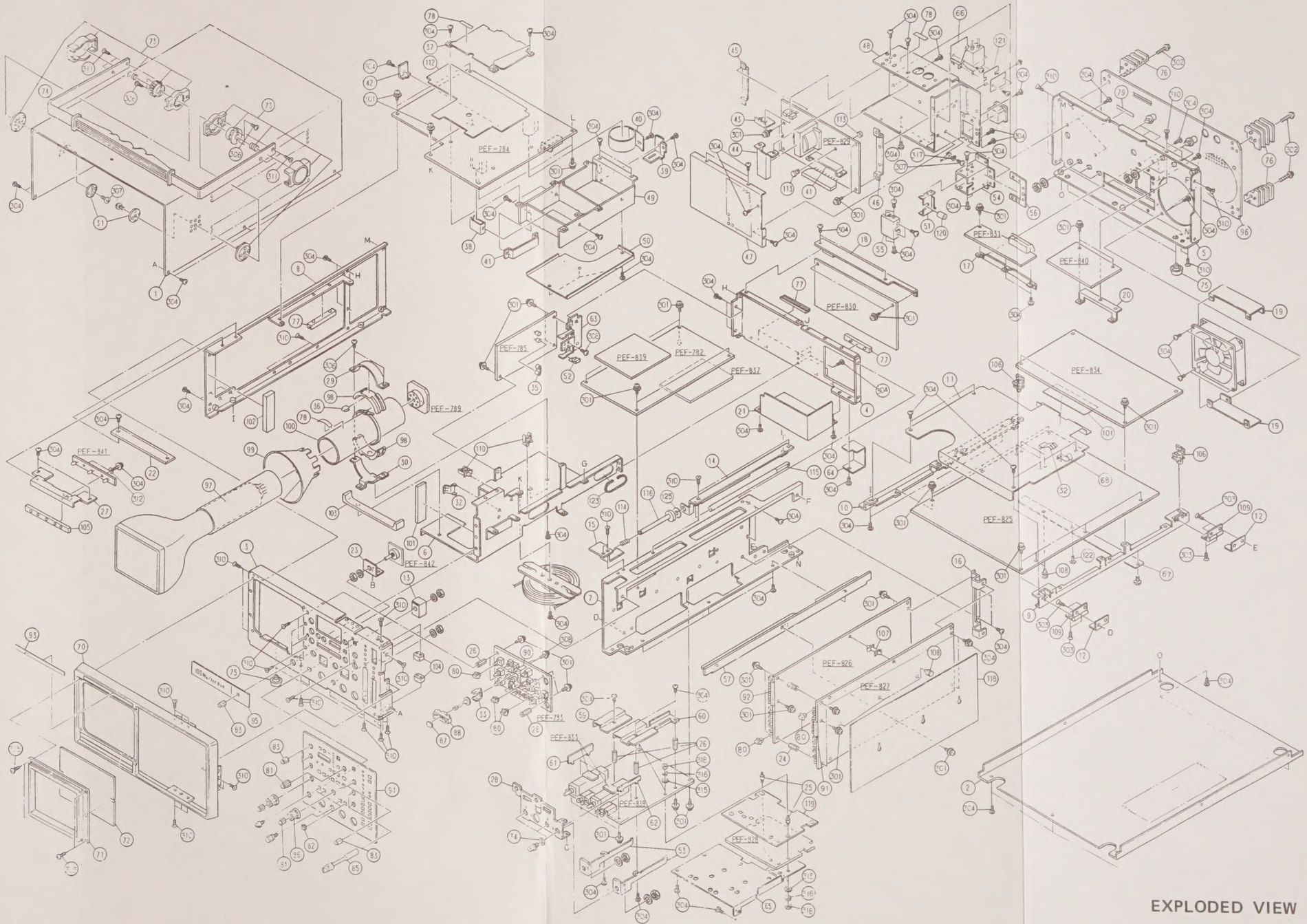

EXPLODED VIEW

MODEL VC-6165 DIGITAL STORAGE OSCILLOSCOPE SERVICE MANUAL

HITACHI DENSHI, LTD.
23-2, Kanda Suda-cho 1-chome, Chiyoda-ku, Tokyo 101, Japan
Phone: (03) 255-8411, Telex: J24178

HITACHI DENSHI AMERICA, LTD.*

Head Quarter and New York Office
175 Crossways Park West, Woodbury, New York 11797, U.S.A.
Phone: (516) 921-7200, FAX: 516-496-3718, TWX: 510-221-1899

Chicago Office
250 East Devon Ave., Suite 115 Itasca, Illinois 60143
Phone: (312) 250-8050

Los Angeles Office
18005 South Adria Maru Lane, Carson, California 90746, U.S.A.
Phone: (213) 538-4880, FAX: 213-515-1029

Dallas Office
14169 Proton Road, Dallas, Texas 75234, U.S.A.
Phone: (214) 233-7623, FAX: 214-458-9284

Atlanta Office
3610 Clearview Parkway, Doraville, Georgia 30340, U.S.A.
Phone: (404) 451-9453, FAX: 404-458-8356

HITACHI DENSHI, LTD. (CANADA)*

Head Office
65 Melford Drive, Scarborough, Ontario M1B 2G6, Canada
Phone: (416) 299-5900, FAX: (416) 299-0450, Telex: 652-5324

Eastern Office
8096 Trans-Canadienne, St-Laurent, Quebec H4S 1M5, Canada
Phone: (514) 332-6687, FAX: (514) 335-1664, Telex: 582-4768

Western Office
3433 12th St North-East, Calgary, Alberta T2E 6S6, Canada
Phone: (403) 291-4388, FAX: (403) 250-1634, Telex: 382-5861

Ottawa Office
159 Colonnade Road, Unit #3, Nepean, Ontario, K2E 7J4, Canada
Phone: (613) 727-3930, FAX: (613) 727-3955, Telex: 053-4533

HITACHI DENSHI (EUROPA) GmbH*

Head Office
Weiskircher Straße 88, D-6054 Rodgau 1 (Jügesheim), West Germany
Phone: (06106) 13027, FAX: (06106) 16906, Telex: 417-849

HITACHI DENSHI (U.K.) LTD.*

Head Office
Garrick Industrial Centre, Garrick Road, Hendon, London NW9 9AP, United Kingdom
Phone: (01) 202-4311, FAX: 01-202-2451, Telex: 27449

Leeds Office
Video House, 56 Manor Road, Leeds, LS11 5PZ, United Kingdom
Phone: 0532-430294, FAX: 0532-459263

* Subsidiaries of Hitachi Denshi, Ltd.

Printed in Japan 87101-3HN1[illegible]
FNo.6233-MGA1388